LP-II

Electronic Price Computing
Label/Receipt Printing Scale

OWNER' S MANUAL

REV: 2.00 Jan. 2002

CAS

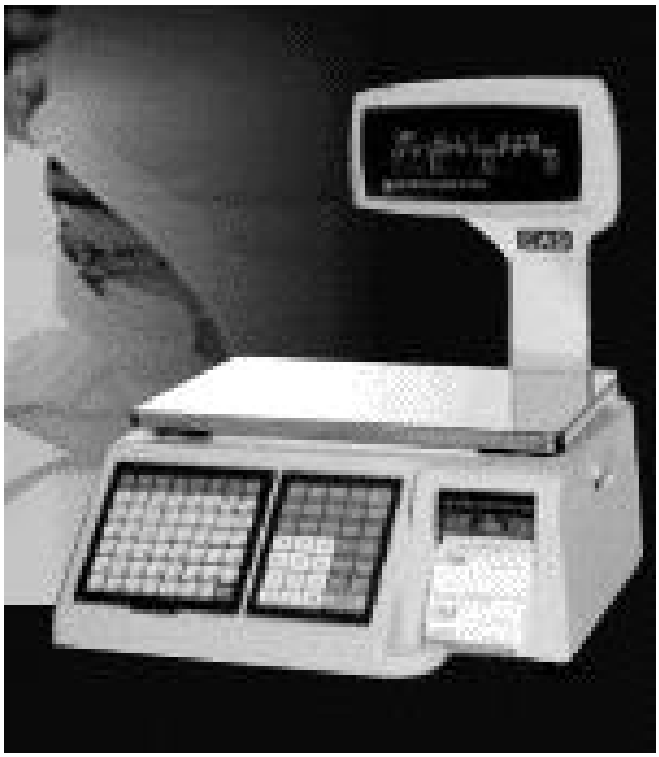

Attention:

Copyright© 2001, by CAS Corporation. All rights reserved. No part of this publication may be reproduced, transmitted, transcribed, stored in a retrieval system, or translated into any language or computer language, in any form or by any means, electronic, mechanical, magnetic, optical, chemical, manual or otherwise, without the prior expressed written permission of this company.

Disclaimer:

This company makes no representations or warranties, either expressed or implied, with respect to the contents hereof and specifically disclaims any warranties of merchantability or fitness for any particular purpose. Any software describes in this manual is sold or licensed "as is". Should the programs prove defective following their purchase, the buyer (and not this company, its distributors, or its dealers) assumes the entire cost of all necessary servicing, repair, and any incidental or consequential damages resulting from any defect in the software. Further, this company reserves the right to revise this publication and to make changes from time to time in the contents hereof without obligation to notify any person of such revision or changes.

Brand and product names are trademarks and/or registered trademarks of their respective companies.

TABLE OF CONTENTS

PAGE

1 General **1**
1.1 Introduction 1
1.2 Model and Specifications 2
1.3 Options and Accessories 3
1.4 Dealers and Service 4
2 Unpacking and Assembly **6**
2.1Box Contents 6
2.2 Assembly of Display Column 7
3 Proper Operation **8**
3.1 Environmental Considerations & Safety **8**
3.2 Leveling and Location 9
3.3 Dont's 10
3.4 Cleaning and Maintenance 11
3.5 Power Outlet and Requirements 12
4 Nomenclature **14**
4.1 Scale Overview 14
4.2 Display and Indicators 15
4.3 Printer 16
4.4 The Sales Mode Numeric Key Pad Configuration (Standard) 17
4.5 The Sales Mode Numeric Key Pad Configuration (USA) 20
4.6 The Program Mode Numeric Key Pad Configuration 22
4.7 The Sales Mode PLU Key Pad Configuration 24
4.8 The Program Mode PLU Key Pad Configuration 25
5 Quick Set-Up **27**
5.1 Installation of the Label Roll 27
5.2 Basic Quick Start 29
6 Programming **32**
6.1 Main Menu 32
6.1.1 Store Settings 33
6.1.2 Store Name, Address, & Number 33
6.1.3 Security Control 34
6.1.4 Department Names 36
6.1.5 Scale Assignments 37
6.1.6 Date and Time 37
6.2 Settings 38
6.2.1 Print Inhibiting 38
6.2.2 Sales Messages 39
6.2.3 Scrolling Message 39
6.2.4 Scrolling Sequence 40
6.2.5 Tax Rates 41
6.2.6 Label Type 41
6.2.7 Adjust Feed Length 42
6.2.8 Origin 43
6.3 PLU Programming 44
6.3.1 PLU Price Change 44
6.3.2 Creating PLUs 47

TABLE OF CONTENTS

PAGE

6.3.3 Copying PLUs 54
6.3.4 Renumbering PLUs 55
6.3.5 Listing PLUs 55
6.3.6 Edit PLUs 56
6.3.7 Deleting PLUs 56
6.3.8 Edit PLU Text 57
6.4 Speed Key Programming 57
6.5 Global Settings 58
6.6 Network management 59
7 Sale Modes 60
7.1 REG, MGR, and RPK Modes 60
7.2 REG Mode 60
7.2.1 ZERO Key 61
7.2.2 TARE Key 61
7.2.3 lb/kg Key 62
7.2.4 ON/OFF Key 62
7.2.5 PLU/SHIFT Key and Speed keys 63
7.2.6 MISC PLU keys 63
7.2.7 FOR key 65
7.2.8 1/2, 1/4, and 100 g keys 66
7.2.9 Clear key 67
7.2.10 ADD, VOID, and ST/TTL keys 67
7.2.11 SAVE key 68
7.2.12 AUTO/MANUAL key 68
7.2.13 PRE-PACK key 69
7.2.14 X key 69
7.2.15 RETURN key 70
7.2.16 OVERRIDE key 71
7.2.17 DEPT key 72
7.2.18 Temporary Date Change 73
7.2.19 Temporary Date Print Inhibit 73
7.2.20 Temporary PLU Data Change 74
7.3 MGR Mode 74
7.4 RPK Mode 75
8 .X and Z Modes 76
8.1 Reading Sales Summaries: X mode 76
8.1.1 PLU Sales 76
8.1.2 MISC PLU Sales 78
8.1.3 Group Sales 78
8.1.4 Department Sales 79
8.1.5 Scale Sales 79
8.1.6 Hourly Sales 80
8.1.7 Clerk Sales 80
8.1.8 Summary Report 80
8.2 Resetting Sales Summaries: Z mode 81

TABLE OF CONTENTS

PAGE

Appendix A: Country Codes 80

Appendix B: Label Formats 82
Appendix C: Brief Manual 84
Warrantee

1 General
1.1 Introduction

Thank you for purchasing the CAS LP-2 price computing electronic printing scale. We have designed this equipment with many advanced features, high quality construction, and user-friendly menu driven programming. We are confident that you will find the CAS LP-2 scale will meet all of your most demanding needs.

Sales data is easily acquired through many of the available reports which are quickly accessible through the on-screen menus. Also available: 4 inch per second printing speed, 53 preset keys (106 using the SHIFT key), and several operation modes that enable you to control & limit access to the scale.

For larger operations, there is an in-store network that can have up to 32 scales. Another powerful feature is RS-232 port, which can tie a scale to a personal computer (P.C.) for exporting or importing program data. Because PLU and all other data files are kept locally in each scale's RAM memory, the scale's speed is the same in a Network setting or as a stand-alone unit.

The LP-2 can be easily used with a wide variety of industry standard thermal labels. By simply entering a label's length and width dimensions, you can use practically any of them on the LP-2! You can also use continuous strip labels or even thermal paper. You also can print logos, templates, Nutri-Facts panels, ingredient messages, advertisement lines, and more.

Remember, for proper installation and maintenance please have your Authorized CAS Dealer do the primary installation, programming, and demonstration. Your CAS Authorized Dealer also has a wide variety of supplies, accessories, and expansion options for whatever your new and increasing demands may require. Authorized CAS dealers are trained to help you with every aspect of the LP-2 and should you need servicing, they are expertly trained by CAS to assist you with virtually any problem.

The LP-2 also comes with a trial version the SP-2 software package. This software runs on any PC using the Windows® 95/98/2000 operating system. You can use the SP-2 program for as long as you would like. You can design your own label formats on your computer screen and save them to your hard drive. With this WYSIWYG interface, the labels you see on-screen appear exactly "as they will print." You can also manage all of the LP-2's programs and options like pricing, PLU programming, etc. You can upload data from an LP-2 or download data, perfect as an emergency backup system. All this and many more features are packed into the SP-2 software package. To purchase the full version of the SP-2 system, contact the Authorized CAS Dealer nearest you.

To find the Authorized CAS Dealer nearest you, please visit our web-site at **www.cas-usa.com**.

1.2 Model and Specifications

MODEL	**LP-2**, (version 1.01)
CHARACTERS PER PLU	**Ingredients:** 2000 char. MAX, **PLU Name:** 114 char. MAX
DISPLAYS	WEIGHT: 5 digits (5 max) UNIT PRICE: 6 digits (8 max) TOTAL PRICE: 7 digits (9 max)
GENERAL PROGRAMMABLE DATA	▪ *Scrolling Messages : 32 @ 80 Char* ▪ *Sales Messages : 32 @ 40 Char* ▪ *Store Name : 150 Char* ▪ *Departments : 32 @ 20 Char* ▪ *Users/Clerks : 99 @ 20 Char* ▪ *Label Formats : 999 @ 30 Char* ▪ *Label Formats : Over 50 Built-In* ▪ *Origin : 400 @ 25 Char*
INTERFACES	RS-232 Serial Ports: COM1, COM2
LABEL SIZES	**Width:** 10mm~80 mm (0.40 in.~3.15 in.) **Length:** 20mm~170 mm (0.94 in.~6.69 in.) **Length:** 850 mm (33.46 in.) max length using linked formats.
MAX TARE	FULL CAPACITY
MEASUREMENT TYPE	LOAD CELL
MEMORY CAPACITY	Over 800 PLUs Standard memory configuration.
MEMORY OPTION	Over 4000 PLUs Expanded with optional memory card.
NETWORK SPECIFICATIONS	▪ 32 Scales MAX (TCP/IP 99MAX) ▪ 99 Clerks MAX ▪ 100m (0.06 miles) max cable length ▪ 4 Mbps Network Speed ▪ Optional Network card required
OPERATING TEMP.	-10° C~ 40° C (14° F~ 104° F)
PLU PROGRAMMABLE DATA	▪ *Department # : 1~32* ▪ *PLU # : 1~999999* ▪ *Commodity Name : 114 Char* ▪ *Label Format # : 1~999* ▪ *Sales Message # : 1~32* ▪ *Unit : lb, kg* ▪ *Group Code : 0~99* ▪ *Tax Rates : 0~3* ▪ *Country Code : 0~999* ▪ *Sell By Date : 0~999 days* ▪ *Cook By Date : 0~999 days* ▪ *Tare Weight : 0~Capacity* ▪ *Price : 0.00~9999.99* ▪ *Sale Weight : 0~Capacity* ▪ *Sale Price : 0.00~9999.99* ▪ *Net Weight : 0~99999* ▪ *Count : 1~99* ▪ *Sale Count : 0~99* ▪ *UPC : 0~999999* ▪ *Ingredients : 2000 Char* ▪ *Origin : 25 Char* ▪ *Barcode Type/Format* ▪ *Nutritional Information*
PLATTER SIZE	**Length:** 403 mm (15.87 in.), **Width:** 260 mm (10.24 in.)
POWER SOURCE	85~240VAC 50/60Hz ±5%
PRINT SPEED	100 mm/sec (4 in./sec)
PRINTER TYPE	DIRECT THERMAL PRINT
SALES PERIODS	Dual totals for daily/monthly or user selectable reporting periods.
SALES REPORT MODES	**Read:** X1/X2 Modes, **Read & Reset:** Z1/Z2 Modes
SALES REPORT TYPES	▪ Daily PLU & Misc. PLU Report ▪ Daily Department Report ▪ Daily Scale Report ▪ Daily Group Report ▪ Daily Hourly Report ▪ Daily Detailed Report ▪ Monthly PLU & Misc. PLU Report ▪ Monthly Department Report ▪ Monthly Scale Report ▪ Monthly Group Report ▪ Monthly Hourly Report ▪ Monthly Detailed Report ▪ Clerk Report
SHIPPING WEIGHT	13 kg (29 lb)
WEIGHING CAPITY	0~15 x 0.005 lb / 0~30 x 0.01 lb 0~30 x 0.01 lb / 30~60 x 0.02 lb (0~6 x 0.002 kg / 0~15 x 0.005 kg, 0~15 x 0.005 kg / 15~30 x 0.01 kg
WEIGHING RANGE	DUAL RANGE
WEIGHING UNITS	Pound & Kilo push-button selectable.(Only USA version)

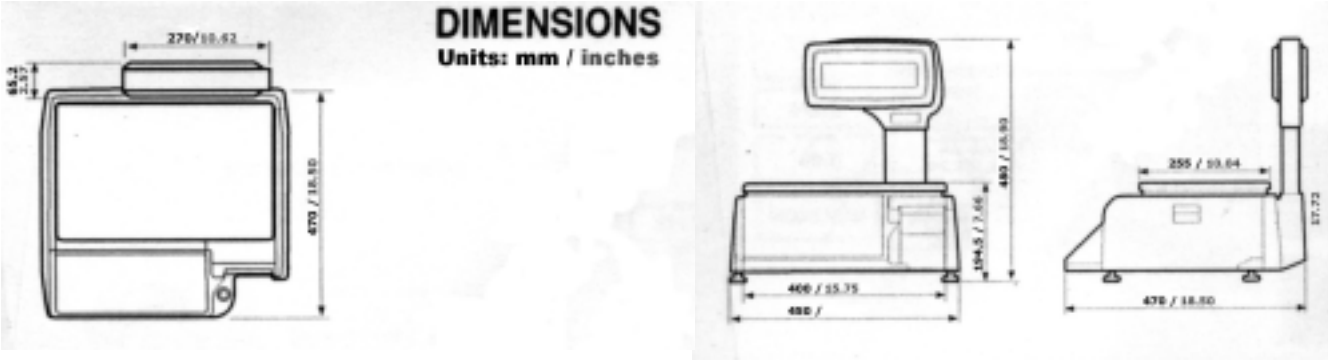

Note: Specifications are subject to change without notice.

1.3 Options and Accessories

1) **Memory Upgrade Card:** This memory upgrade card has 3 Megabytes of memory. The LP-2 uses NV-RAM (Non-Volatile RAM) as the exclusive storehouse for PLUs and user-defined label formatting data. Non-volatile memories do NOT require any power in order to maintain their information and are also normally in a "protected" mode that prevents writing to it. This card allows you expand your PLU capacity and add more custom label formats. It can provide you with over 3200 additional PLUs above the 800 already available with the standard LP-2 memory.

Memory card upgrade *MUST* be installed by an Authorized CAS Dealer.
Description: LP-2 Memory expansion card, 3 MB NV- RAM Card

---

2) **Scale Network:** This upgrade allows you to connect up to 32 scales in a Master-Slave Network which can provide you with consolidated sales reports, upload and download of program data, effect price changes, and much more. Each LP-2 on the network needs a network card and assigned a scale number as well as network wiring in order to network the scales. All the required wiring and connectors are 10BASE-T Ethernet cable and connectors.

Network card installation *MUST* be installed by an Authorized CAS Dealer.
Description: LP-2 (Ethernet)Network card- Network Manual.

Network cabling *MUST* be installed by an Authorized CAS Dealer.
Description: LP-2 (Ethernet)Network cabling-Network Manual.

---

3) **Accessories:** The following accessories are available through your Authorized CAS Dealer:

Replacement Speed-Key pull-out template (left-side keyboard.)
Optional Fish Pan platter, stainless steel.
Replacement COM port door, left side.
Replacement Leveling feet, set of 4.
Replacement Numeric pull-out template (right-side keyboard.)
Replacement Platter Cushions, set of 4.
Replacement Printer door, right side.
Replacement Printer Label Roll-holding pin.
Replacement Printer Pick-up Spool.
Replacement Thermal Labels (12 rolls per case, minimum 1 case.)*†
Replacement Thermal Print Head Cleaner Pen.

***NOTE:** When ordering labels, please be sure to specify label type and stock number.
†NOTE: If you do not use the proper "CAS Approved" labels or other media for your scale's printer, you risk voiding your warranty. Please refer to your local Authorized CAS dealer for details.

1.4 Dealers and Service

1) **Our Dealers:** CAS Corporation is committed to offer the best products and the best service. To offer the best products, CAS manufactures all of its products using only the best components available and thoroughly tests all of its products to assure a maximum level of quality and dependability. CAS feels that each of its valued customers should get the best service available. Whether it's the initial installation of our product, maintenance/repair work, or simply answering questions about our products, CAS Corporation and all of its Authorized Dealers are highly trained to assist you with any need regarding CAS products.

2) **Our Service:** CAS (USA) offers service and support to all of its US products through its vast network of Authorized Dealers. If you cannot find or are unaware of any CAS Authorized Dealers in your area, please visit us on the web at www.cas-usa.com. We will help you locate the CAS Authorized Dealer nearest you.

3) **Dealers and Service:** The CAS family of Authorized Dealers is always ready to assist you. Should you need warranty service, supplies, or even have some questions about our products, don't hesitate to call on us! Remember that your first contact should always be the local CAS Authorized Dealer whom you purchased the product from. He is best able to quickly help you with any problem or question you should have regarding our product. CAS Authorized Dealers have a vast library of documentation, stock of replacement parts and supplies, and all of the training needed to assist you. Whether it's help programming or maintaining your CAS products, CAS Authorized Dealers are always ready to assist!

   Thank you again for making CAS your choice!

2 Unpacking and Assembly
2.1Box Contents

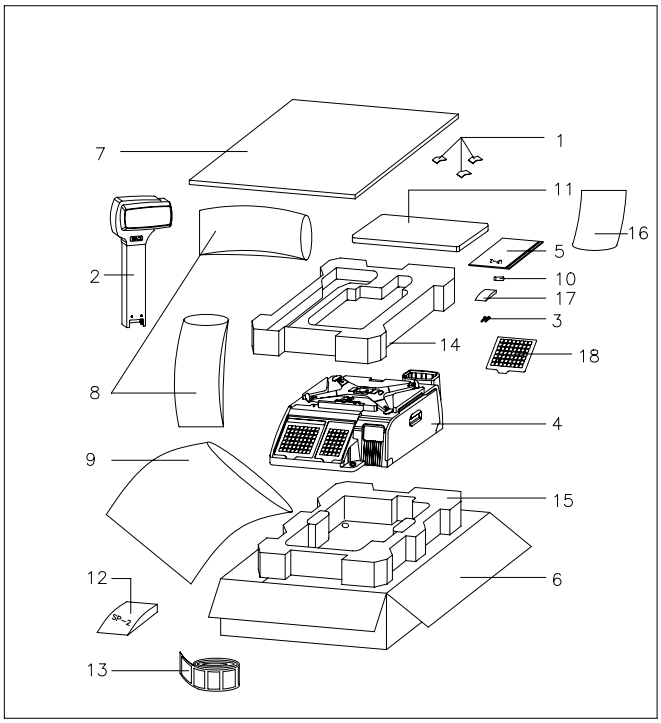

#	Part Number	Description	QTY
1	TBA	Desiccant, silica bag	2
2	TBA	LP-2, Display assembly	1
3	TBA	LP-2, Display assembly screws	2
4	TBA	LP-2, Scale body	1
5	TBA	Owner's Manual, LP-2	1
6	TBA	Packing box	1
7	TBA	Packing lid	1
8	TBA	Plastic bag, display column	1
9	TBA	Plastic bag, platter	1
10	TBA	Plastic bag, scale	1
11	TBA	Plastic lock-bag, screws	1
12	TBA	Platter	1
13	TBA	SP-2 software package	1
14	TBA	Thermal labels, 1 roll	1
15	TBA	Top form-fitted packing foam	1
16	TBA	Bottom form-fitted packing foam	1

2.2 Assembly of Display Column

1) You must follow the instructions in this section in order to assemble the Display Assembly properly. To begin the installation, make sure that the scale is unplugged from any electrical source. Your scale body has a display column bracket in the rear that the display column slides into. (See fig.)

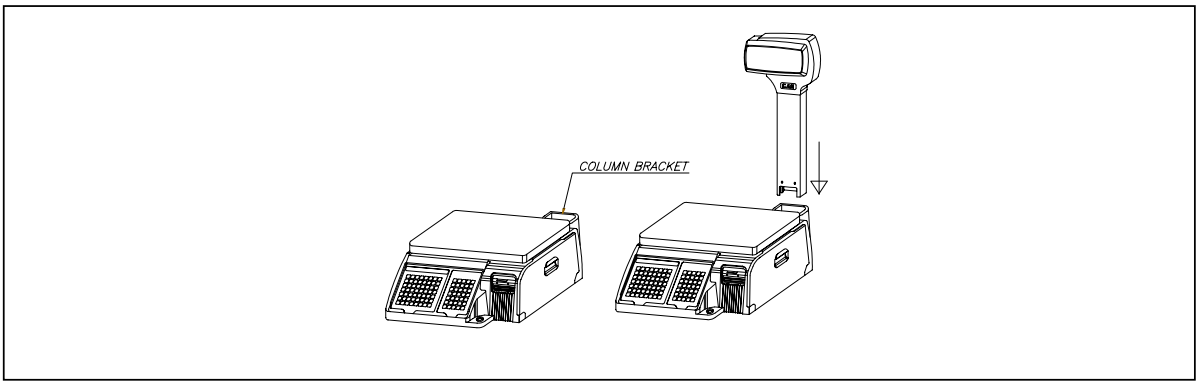

2) Hold the display assembly in front of you such that the display assembly forms the figure "7". Next, with the scale's keyboard facing you, insert the display column into the display bracket. When the display column reaches the bottom of the display bracket, you will "feel" the connectors "snap" together. (See fig.)

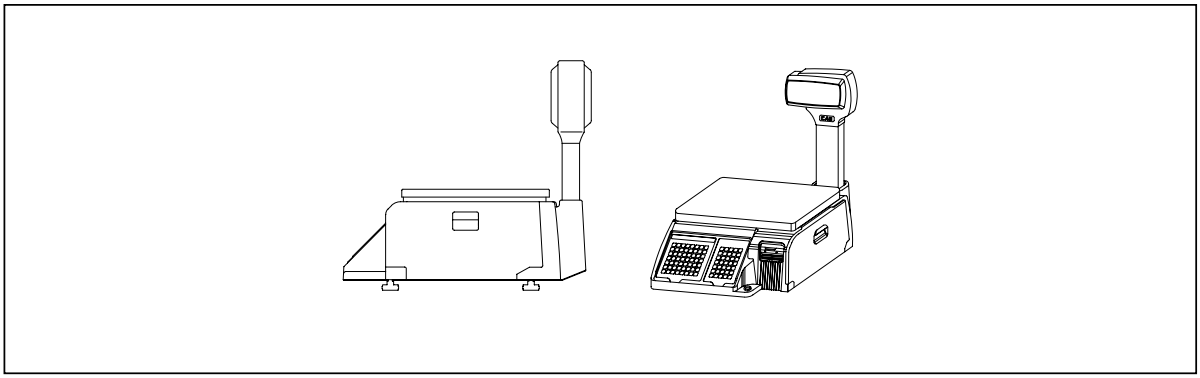

3) Underneath the display bracket you will find 2 screw holes for the display assembly screws. Insert and fasten the 2 display assembly screws. You are done! (See fig.)

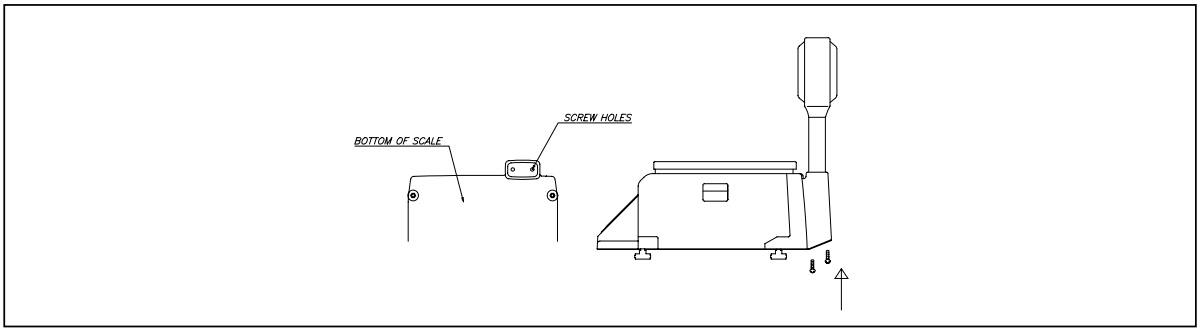

3 Proper Operation
3.1 Environmental Considerations & Safety

1) **Please avoid the following hostile conditions:**

- Temperatures below or exceeding: **-10º C ~ 40º C (14º F ~ 104º F)**
- Excessive vibration
- Wind or fans functioning in direct contact with weighing platform.
- Direct sunlight
- High humidity
- Ungrounded electrical outlet
- Unstable or flimsy surface
- Shared electrical outlet
- Dust or dirt
- Poor ventilation

2) **Environmental Protection:** The scale should be installed in a dry and liquid free environment. When the scale is installed in a high humidity or wet-type environment, be sure to avoid spilling or spraying directly on any surface of the scale.

3) **Personal Safety:** It is extremely important to be aware of personal safety whenever maintaining or operating this equipment. Wherever possible, we have tried to place warning labels and other indicators at the actual location on the equipment where the danger is most likely to occur. However, it is not always possible to foresee all dangerous situations. Warnings and cautions that are necessary for the safe operation of the scale are contained in this manual. Please, make sure to carefully read ALL warnings and cautions before operating the scale.

4) **Observe the following safety precautions:**

- Shut the scale **OFF** and unplug the scale whenever you are changing the label roll or whenever working in the printer bay.
- The outlet that the scale is plugged into, should be properly grounded.
- Whenever connecting or disconnecting **ANY** cables from the scale, be sure to hold the cables by the end connector. Failure to do so may cause a short circuit.
- Maintain a static free work area.
- Never use any other equipment on the same line: it should be a dedicated line.
- The outlet used must have the proper voltage ratings.

3.2 Leveling and Location

1) **Location:** This scale must be placed on a flat and stable surface. Please keep the scale away from the direct path of oscillating fans, ventilation systems, or strong drafts as these air disturbances can be picked-up by the scale's very sensitive weighing platform and may cause incorrect weight readings.

2) **Leveling:** If the scale is not properly leveled, please adjust the 4 adjustable legs at the bottom of the scale. Turn the legs clockwise or counterclockwise so as to center the bubble of the leveling gauge inside the indicated circle. Turning the adjustable legs counter-clockwise (viewed from top of scale) will lower that part of the scale. Turning the adjustable legs clockwise (viewed from top of scale) will raise that part of the scale. (See Fig.)

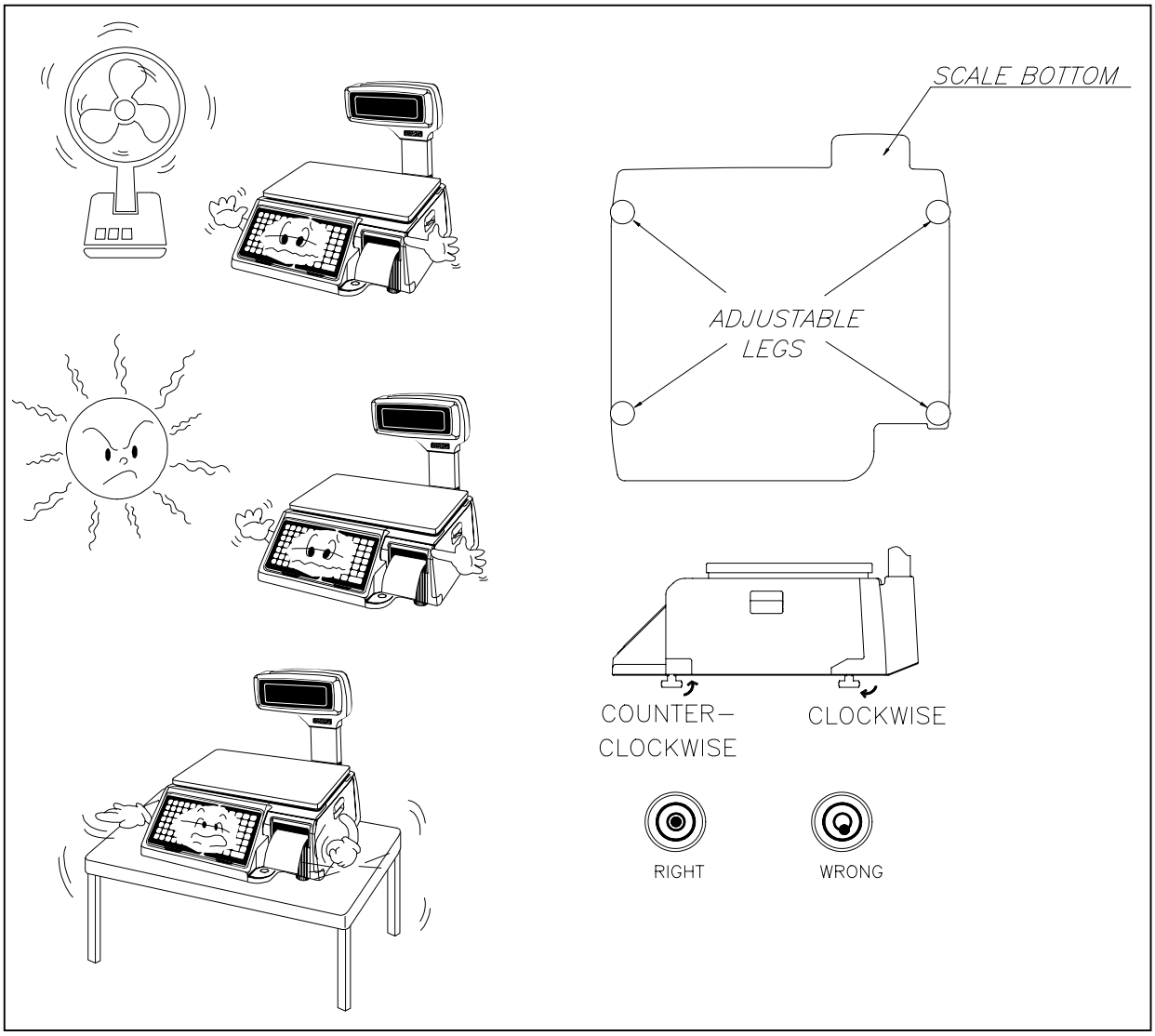

7

3.3 Dont's

- DO NOT subject the platter to sudden shocks.
- DO NOT drop anything on the platter.
- DO NOT store any thermal labels where they may be subject to:
  - direct sunlight
  - high humidity
  - high temperature
  - dust.
- DO NOT press the keys excessively hard. The keys will operate correctly if they are pressed lightly. If any keys fail to work, contact your Authorized CAS Dealer.
- DO NOT hold or attempt to carry the scale by the Pole Display.
- DO NOT pour water or ANY liquid directly on the scale.
- **DO NOT use any label media that is not recommended by CAS Corp.**
- DO NOT attempt to effect repairs to this equipment. Doing so is against the law in most states. If any fault occurs that cannot be rectified using this manual, unplug the scale and contact you Authorized CAS Dealer.

3.4 Cleaning and Maintenance

1) The LP-2's exterior should be cleaned with a damp cloth and a mild soap solution. Do not spray any chemicals directly onto the LP-2. Always spray any cleaning liquids onto the cloth rag you are using to wipe the scale clean. Remember NEVER to hose-down the scale. Before doing any type of cleaning, always make sure that the scale is turned OFF using the side COM Port Access Panel ON/OFF switch. Using the keyboard's ON/OFF switch is NOT enough.

   The keyboards should be cleaned with a damp cloth rag soaked in a mild soap solution. Never spray water or any liquid directly on to the keyboard as these may cause damage to the keyboard's seal and then further damage individual keys. DO NOT use solvents, harsh, or abrasive chemicals or cleaning devices as these may discolor and even completely remove the trim paint on the keyboards. If you require more thorough cleaning, contact your local Authorized CAS Dealer for service.

   The displays should be cleaned with a damp cloth rag soaked in a mild soap solution. Never spray water or any liquid directly on to the displays as these may cause damage to the display's seal and possibly short out the scale's electronic components. Also, these displays use very high voltages so special care should be taken never to wet them. DO NOT use solvents, harsh, or abrasive chemicals as these may discolor and even completely remove the wording on the displays. If you require more thorough cleaning, contact your local Authorized CAS Dealer for service.

2) To clean the LP-2's platter, please make sure that the scale is turned OFF using the side COM Port Access Panel ON/OFF switch. Using the keyboard's ON/OFF switch is NOT enough. First, remove the platter from the platform and place it in a large tub or sink. You can wash it down with soap and high-pressure water and/or hot water. Before replacing the platter on the platform, make sure that it is completely dry.

3) The printer compartment also needs cleaning; however, this process requires more careful cleaning. There are many sensitive parts as well as moving parts in the printer bay. Whenever doing anything in the printer bay, please make sure that the scale is turned OFF using the side COM Port Access Panel ON/OFF switch. Using the keyboard's ON/OFF switch is NOT enough.

   To begin, turn the scale OFF via the ON/OFF switch located on the left side of the scale in the COM Port Access Panel. Next, open and remove the Printer Side Access Panel. With a small brush or toothbrush, remove all of the debris that has accumulated on the base of the printer bay. DO NOT attempt to remove any dirt or debris from anywhere else in the printer bay area. If you require more thorough cleaning, contact your local Authorized CAS Dealer for service. If you attempt to effect cleaning of other printer parts yourself, you risk damage to components or even electrical shock regardless of the scale's ON/OFF status.

4) The thermal print head also requires cleaning. It is recommended to clean the thermal print head every time you replace the label roll. You can clean the thermal print head with the Print Head Cleaner Pen supplied with the LP-2. These Cleaning Pens have a limited shelf-life and should NOT be used after there expiration dates. Each pen has instructions on their durability. Always follow those guidelines. Detailed instructions on how to clean the thermal print head are shown in section **4.3 Printer**.

3.5 Power Outlet and Requirements

1) The LP-2 is designed to be used almost anywhere in the world! Like the many appliances of today, the LP-2 is designed with an automatically switching power supply. This allows operation when connected to an AC source from 85V to 240V at 50/60Hz with 5% tolerance.

   Remember: a switching power supply does not imply that bad, noisy, or improperly wired power lines will be problem free. With that in mind, please make sure that the power lines used for the LP-2 are dedicated lines with no high-noise devices (such as compressors, motors, etc) running on it. Also, make sure that the wiring to the electrical socket is correct. If you are uncertain as to the state of your business' electrical lines, please contact a certified electrician.

2) Once you are sure as to the safety of the electrical line, make sure to ONLY plug the scale into a 3-prong outlet. The third prong is a safety ground and an electrician should properly wire this if it is not correct or if you are unsure. Failure to this CAN result in electrical shock from use of this or any electronic scale.

3) Do not use any 3-prong to 2-prong adapters or break-off the third prong from the LP-2 power cord. The third prong is necessary and must be properly connected.

4) If you have any problems or questions regarding this matter, make sure to consult an Authorized CAS Dealer or an electrician.

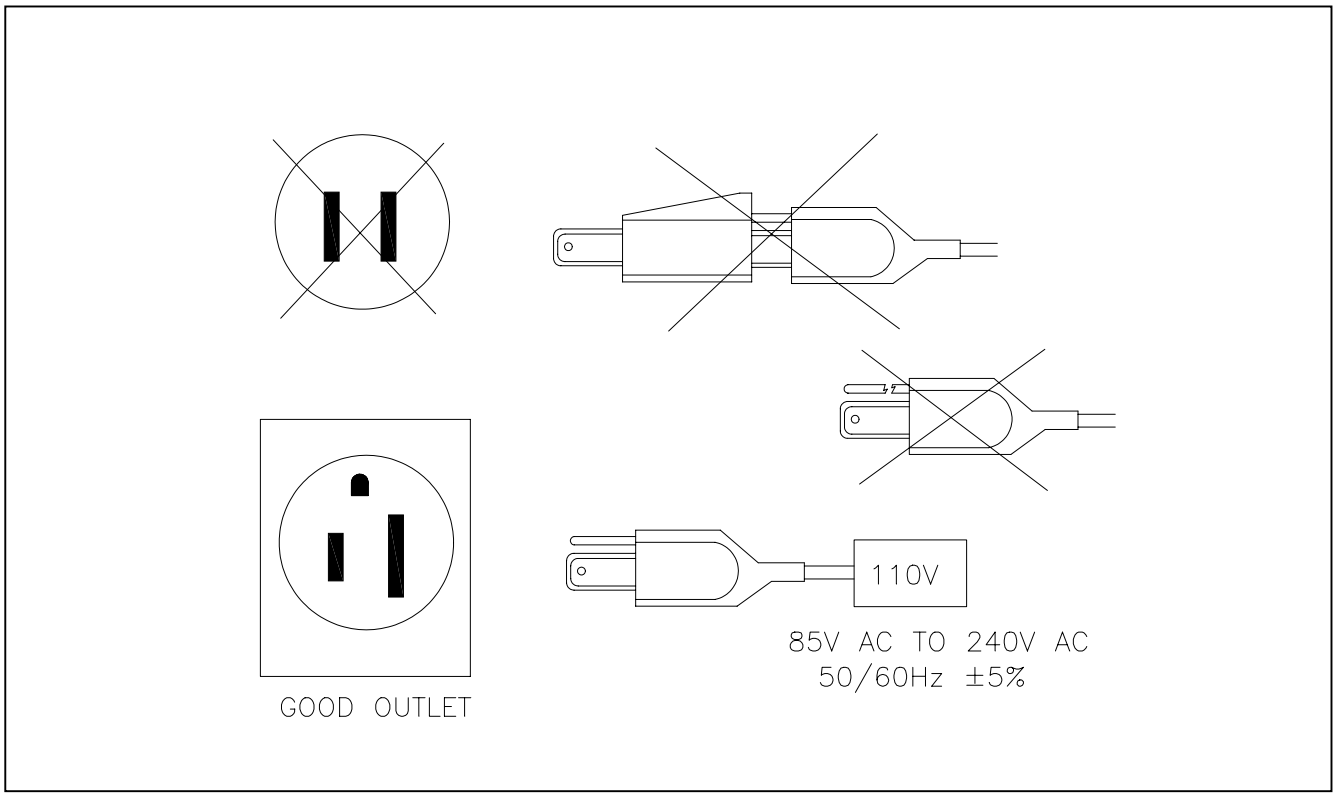

3 Proper Operation

Note: **Be sure to check the LP-2's serial number plate on the back of the scale for power specifications.**

4 Nomenclature
4.1 Scale Overview

1) Pictured below are important scale components and parts that you should be familiar with.

#	Description	#	Description	#	Description
1	Advertisement Insert, rear	8	Fuse Cap	15	Power Switch
2	Connector, COM1	9	Gauge, Leveling	16	Printer
3	Connector, COM2	10	Keyboard, Numeric	17	Serial Number Plate
4	Connectors, Ethernet	11	Keyboard, Speed Keys	18	Side Access Door, Com port
5	Display Column	12	Leveling Feet	19	Side Access Door, printer
6	Display Window, customer	13	Platform	20	Template Sheet, Numeric
7	Display Window, user	14	Platter	21	Template Sheet, PLU
				22	Connector, Cash Drawer

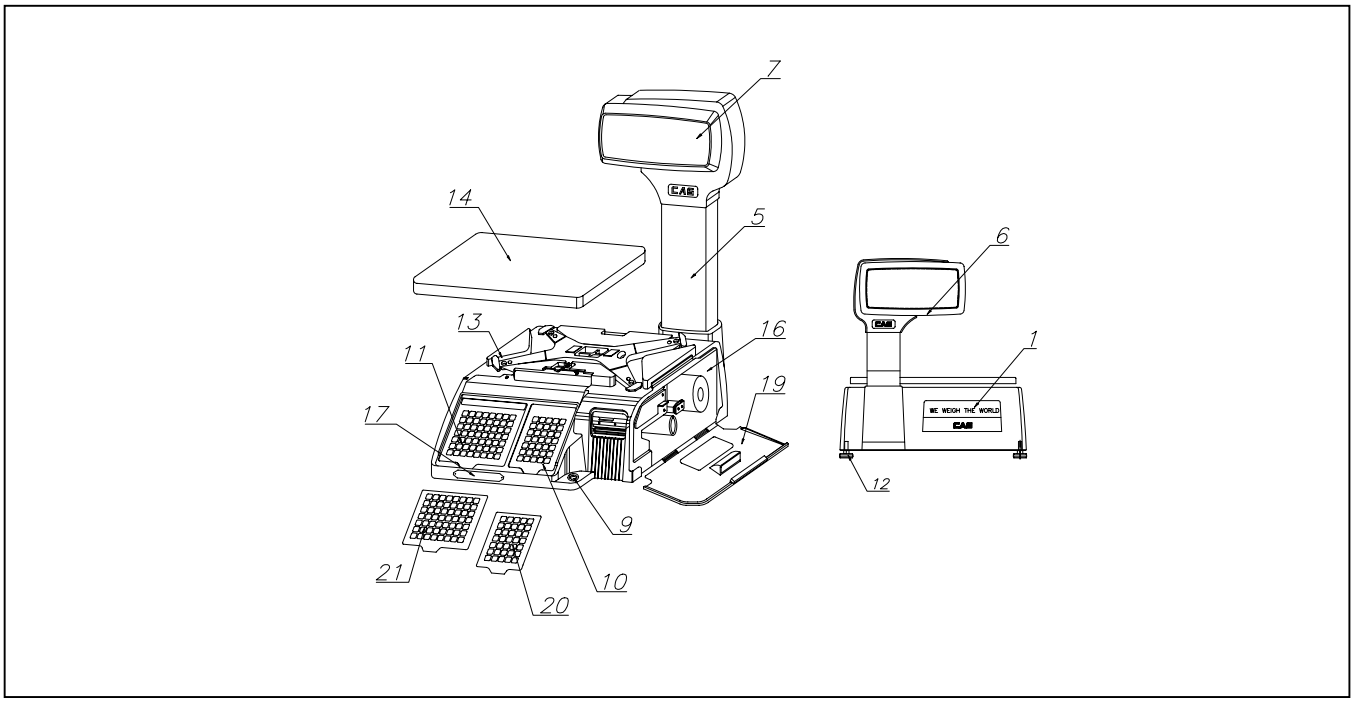

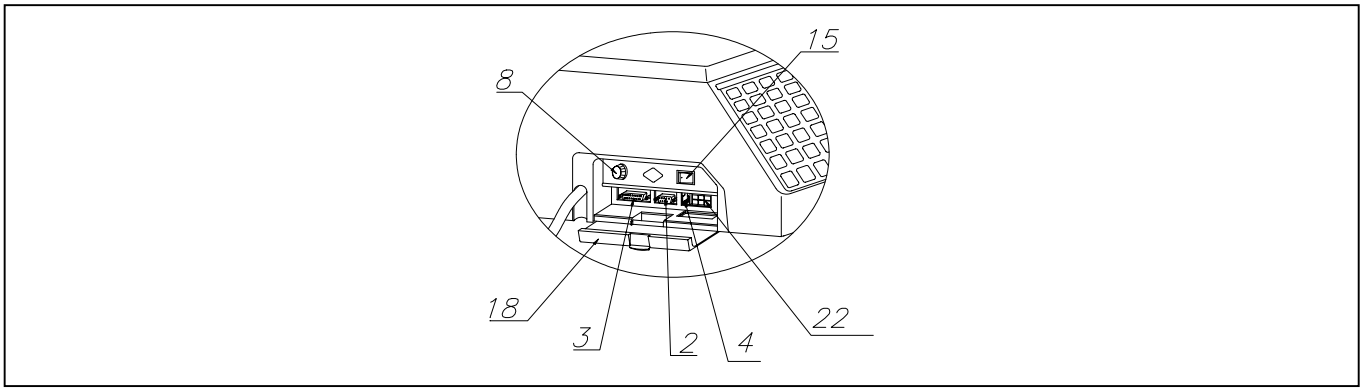

4.2 Display and Indicators

1) **VF Display:** The front and rear displays on the LP-2 are dot matrix vacuum fluorescent displays. They will display all information pertinent to operating the scale.

LP-2 Display Window: Sales

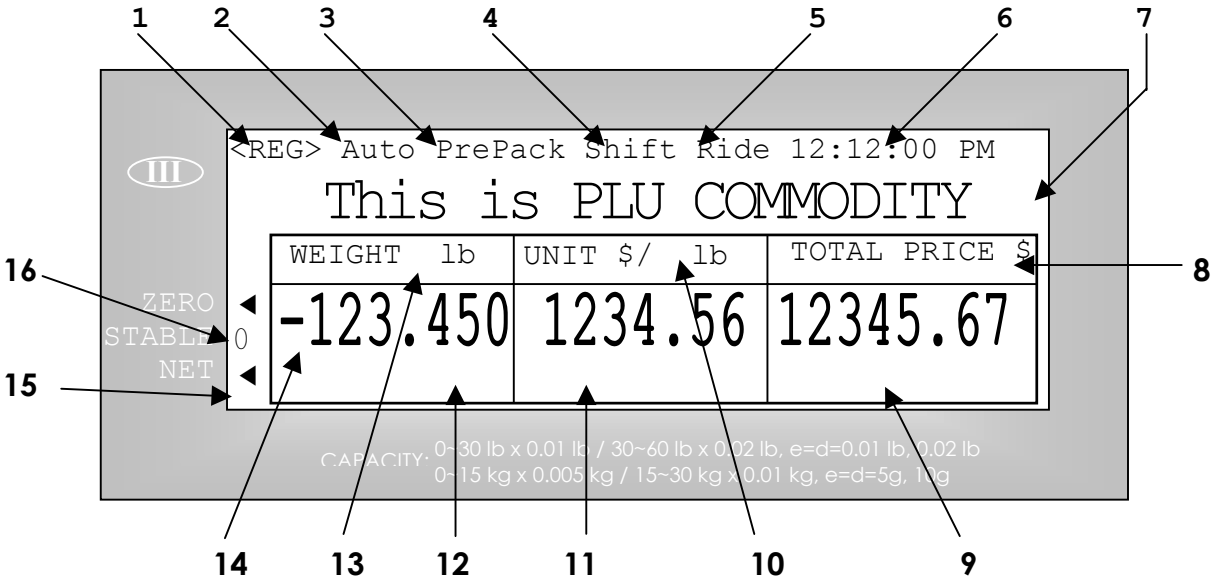

#	Description	Values
1	Mode indicator	REG, RPK, MGR, ADD, NET[1], STR[2],
2	Print Mode indicator	Auto
3	Auto Clearing status indicator	PrePack, Save, *(Blank)*
4	Speed key Shift status indicator	Shift, *(Blank)*
5	Override & Discount Status	Ride, DISC, Disc, 1, 2, 3, *(Blank)*
6	Multi-function indicator	*Time, date, scale #, department #, Alt, Temporary Changes, (Blank)*
7	PLU Description line	*First non-blank line of PLU commodity*
8	Total price heading	TOTAL PRICE *and money symbol*
9	Total price indicator	7 digits USA: 0.00~9999.99
.10	Unit price heading	UNIT, *money and weigh symbols*
11	Unit price indicator	6 digits USA: 0.00~999.99
12	Weight indicator	5 digits
13	Weight heading	WEIGHT *and weigh symbol*
14	Negative weight indicator	-, *(Blank)*
15	Net-Weight indicator	◀, *(Blank)*
16	Stable weight indicator	0 , *(Blank)*
17	Zero weight indicator	◀, *(Blank)*

A Gross Zero indication is reached when the Net-Weight indicator is OFF, the Zero-Weight indicator is ON, the Stable indicator is ON, and the weight reads 0.00 or 0.000.

NOTE[1]: Only on networking scales.

NOTE[2]: Only on stand-alone scales.

4.3 Printer

1) Pictured below are important printer components and parts that you should be familiar with.

#	Description	#	Description	#	Description
1	Label/Paper Roll	7	Pin, label roll	13	Sensor Assembly, Gap
2	Label Roll Spool	8	Platen	14	Sensor Assembly, Peel-Off
3	Lock-Down Tab	9	Pressure plate & width adjuster	15	Shaft, Pick-Up Motor
4	Paper Cutter	10	Release Lever, TPH	16	Side Access Door, printer
5	Peel-Off Bar	11	Roller, return	17	Thermal Print Head
6	Pick-Up Spool Assembly	12	Roller, width-adjusting		

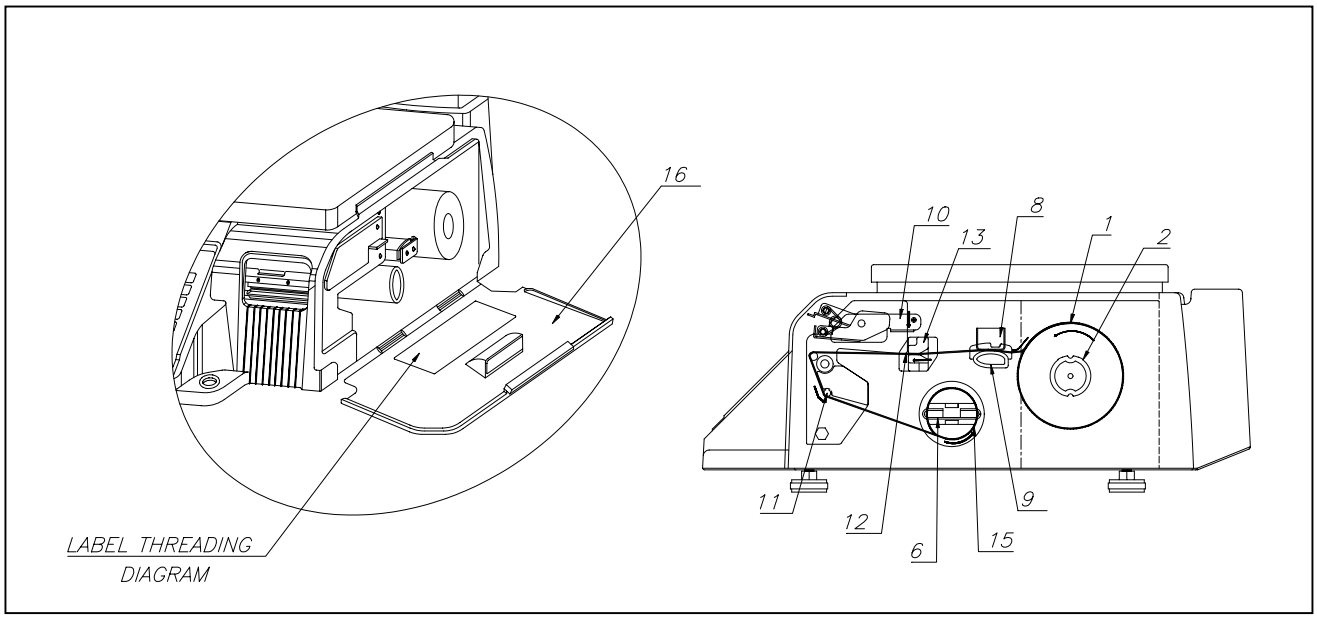

To clean the Thermal Print Head, turn the scale OFF. Open the printer's side-access door and release the print head using the release lever. Using the Thermal Head Cleaner Pen, rub it gently from left to right working your way from the front to the back of the print head. See diagrams below. Do this until the thermal head is clean which should take no longer than 10 seconds. Allow the print head to dry for 5 minutes and then lock it down, close the printer's side-access door, and turn the scale ON.

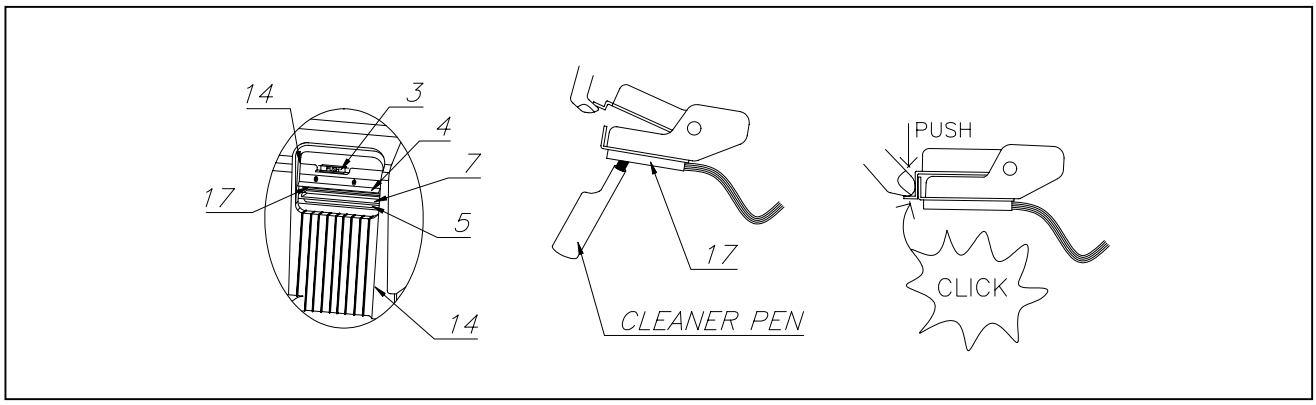

4.4 The Sales Mode Numeric Key Pad Configuration (Standard)

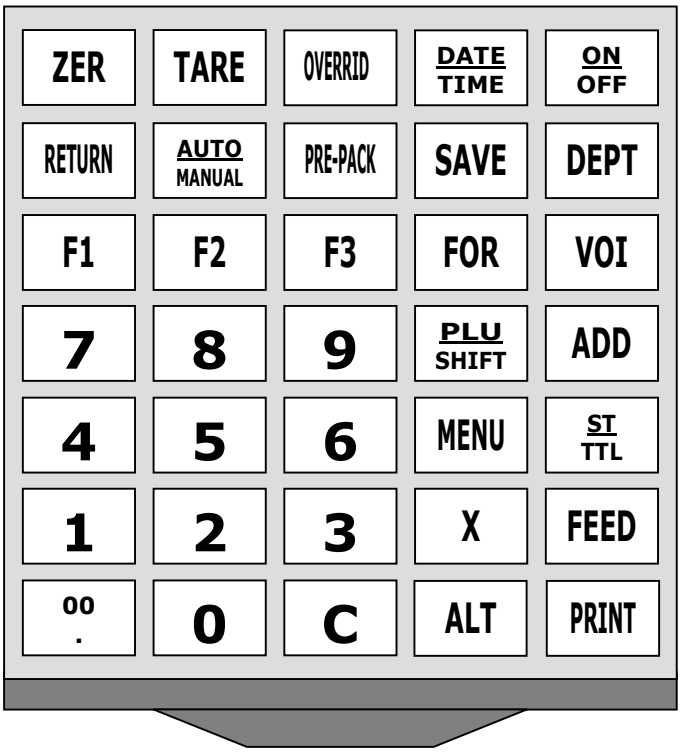

Key	Description
0 ~ 9	Numeric keys. Used to enter pricing, qty, count, tare, etc.
00 .	Double zero & decimal point key.
C	Clear key. Used to clear erroneous entries and error conditions.
ZER	Re-Zero key. Use to remove small variations in the scale's zero.
TARE	Tare key. Use to manually enter and remove tare weights.
OVERRID	Override key. For temporary price change entry. In **REG,** requires a level 2 password. In **MGR,** no password needed.
DATE TIME	Date & Time key. Toggles the display between time, date, scale number, department number, and clerk name. Also does temporary date changes. In **REG,** requires a level 2 password. In **MGR,** no password needed.

4 Nomenclature

Key	Description
ON OFF	ON / OFF key. This key turns the display on or off; **however**, the rest of the scale remains powered.
RETURN	Return key. Used to credit sales for erroneous transactions or returns. In **REG,** requires a level 2 password. In **MGR,** no password needed.
AUTO MANUAL	AUTO/MANUAL key. Toggles between Auto-print mode and Manual mode.
PRE-PACK	Pre-Pack key. Used to enter Pre-Packaging mode in which the scale Auto-prints for every transaction and prevents the auto clearing of data.
SAVE	Save key. Save mode prevents the auto clearing of any called-up data like tare weight, PLU pricing, etc.
DEPT	Department key. For temporarily selecting PLUs from other departments. In **REG,** requires a level 2 password. In **MGR,** no password needed.
F1	Reserved Function Key.
F2	Reserved Function Key.
F3	Reserved Function Key. This key has the function of change
FOR	For key. Use this key for by-count pricing: 3 @ 3 FOR $1.00. It toggles between the QTY, PIECE, and PRICE fields of by-count picing.
VOI	Void key. To remove erroneous sales from ADD-Up or Receipt sales only.
PLU SHIFT	PLU and SHIFT key. When you type a PLU number and press this key, it calls-up that PLU. Simply pressing the key will change the PLU shift status.
ADD	ADD-Up key. This key when used in conjunction with ST/TL key allows you print a customer-total label as well as individual transaction labels.
MENU	MENU key. This key toggles from Main menu to <REG> mode.
ST TTL	Subtotal / Total key. Used with the ADD key in order to print customer-totals.
X	Multi-Label key. Use this key to print multiple sales of the same transaction & is also used for selecting the displayed currency.

4 Nomenclature

Key	Description
FEED	Feed key. Used to feed a label or paper from the printer.
PRINT	Print key. Used to manually print transactions and also serves as an ENTER key.
ALT	ALT key is used in combination with other keys for special functions. When you press this key "Alt" appears on the Time/Date display.

4.5 The Sales Mode Numeric Key Pad Configuration (USA)

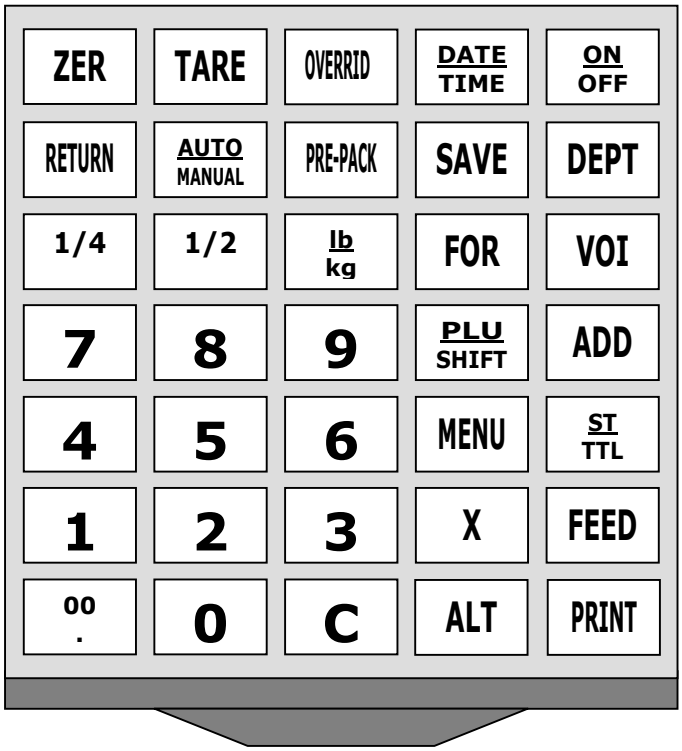

Key	Description
0 ~ 9	Numeric keys. Used to enter pricing, qty, count, tare, etc.
00 .	Double zero key.
C	Clear key. Used to clear erroneous entries and error conditions. This key can use to stop printing of label.
ZER	Re-Zero key. Use to remove small variations in the scale's zero.
TARE	Tare key. Use to manually enter and remove tare weights.
OVERRID	Override key. For temporary price change entry. In **REG,** requires a level 2 password. In **MGR, RPK** no password needed.
DATE TIME	Date & Time key. Toggles the display between time, date, scale number, department number, and clerk name. Also does temporary date changes. In **REG,** requires a level 2 password. In **MGR, RPK** no password needed.

4 Nomenclature

Key	Description
ON / OFF	ON / OFF key. This key turns the display on or off; **however**, the rest of the scale remains powered. Also does temporary DATE Print Inhibit change
RETURN	Return key. Used to credit sales for erroneous transactions or returns. In **REG,** requires a level 2 password. In **MGR, RPK** no password needed.
AUTO / MANUAL	AUTO/MANUAL key. Toggles between Auto-print mode and Manual mode.
PRE-PACK	Pre-Pack key. Used to enter Pre-Packaging mode in which the scale Auto-prints for every transaction and prevents the auto clearing of data.
SAVE	Save key. Save mode prevents the auto clearing of any called-up data like tare weight, PLU pricing, etc.
DEPT	Department key. For temporarily selecting PLUs from other departments. In **REG,** requires a level 2 password. In **MGR, RPK** no password needed.
1/4	1/4 pound key. In lb mode this key is used to multiply unit prices by 4.
1/2	1/2 pound key. In lb mode this key is used to multiply unit prices by 2.
lb / kg	lb/kg key. Use this key to switch from pound to metric weighing.
FOR	For key. Use this key for by-count pricing: 3 @ 3 FOR $1.00. It toggles between the QTY, PIECE, and PRICE fields of by-count picing.
VOI	Void key. To remove erroneous sales from ADD-Up or Receipt sales only.
PLU / SHIFT	PLU and SHIFT key. When you type a PLU number and press this key, it calls-up that PLU. Simply pressing the key will change the PLU shift status.
ADD	ADD-Up key. This key when used in conjunction with ST/TL key allows you print a customer-total label as well as individual transaction labels.
MENU	MENU key. This key toggles from Main menu to <REG><MGR><RPK> mode.
ST / TTL	Subtotal / Total key. Used with the ADD key in order to print customer-totals.
X	Multi-Label key. Use this key to print multiple sales of the same transaction & is also used for selecting the displayed currency.

4.6 The Program Mode Numeric Key Pad Configuration

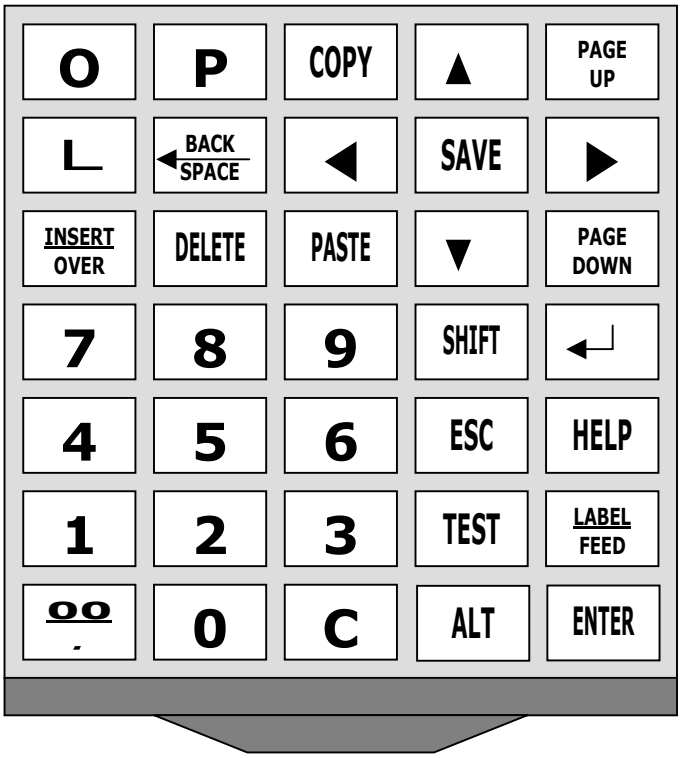

Key	Description
0 ~ 9	Numeric keys. Used to enter programming data.
00 -	Decimal key.
C	Clear key. Used to clear erroneous entries and error conditions
COPY	Copy key.
▲ ▼	Up & Down arrow keys. Use to navigate through PGM mode.
◀ ▶	Left & Right arrow keys. Use to navigate through PGM mode.
BACK SPACE	Backspace key. Used to backspace and delete text data.

4 Nomenclature

Key	Description
PAGE UP / PAGE DOWN	Page Up & Page Down keys. Use these to navigate 1 screen at a time.
A ~ Z	Alpha keys. Used to type text data.
INSERT OVER	Insert/overwrite key. Used to toggle between Insert and overwrite modes for text typing.
SAVE	Save key. At any point in programming, this key saves your current data.
ENTER	Enter key. Used as an ENTER key.
DELETE	Delete key. Used to delete text data.
PASTE	Paste key.
ALT	ALT key. This key is used for special key combination presses.
SHIFT	SHIFT key. This is the Caps Lock key. It controls whether you are typing in uppercase .
ESC	Escape key. This key toggles between Main menu and <REG> mode. It also is used to exit programs.
HELP	Help key. When the screen displays the word of “help”, you can see help message by pressing ‘HELP’key.
TEST	Test key. Used to print test pattern, preview a scrolling message, and print a PLU verification label.
LABEL FEED	Label Feed key. Use this key to feed labels or paper through printer.
↵	Carriage Return key. This key is used to insert Carriage Returns into the Text 1, 2, & 3 fields of PLU Create/Edit.

4.7 The Sales Mode PLU Key Pad Configuration

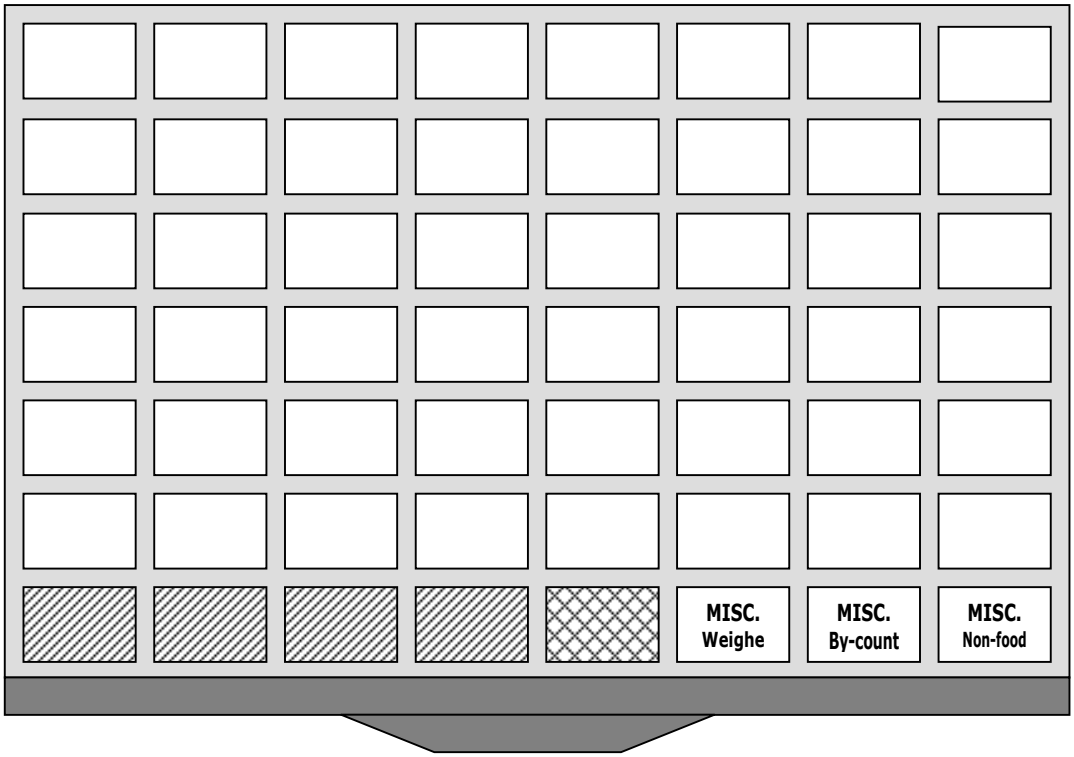

Key	Description
	All of the keys on this keyboard can be Speed keys in **Non-Floating Clerk mode.** Used to call-up PLUs quickly.
MISC. Weighe	Miscellaneous Weighed PLU key. If disabled this key works like any other Speed key.
MISC. By-Count	Miscellaneous By-Count PLU key. If disabled this key works like any other Speed key.
MISC. Non-Food	Miscellaneous Non-Food PLU key. If disabled this key works like any other Speed key.
	In **Floating Clerk mode, only this blank keys can be Speed Keys.**
	Clerk-Speed keys for Clerks 1 to 4 numbered from left to right. And last 5 numbered key is the Clerk Select key **Floating Clerk mode 1 Only**
	CLERK key for selecting clerks 5 through 99. **Floating Clerk mode 1 Only**

4.8 The Program Mode PLU Key Pad Configuration

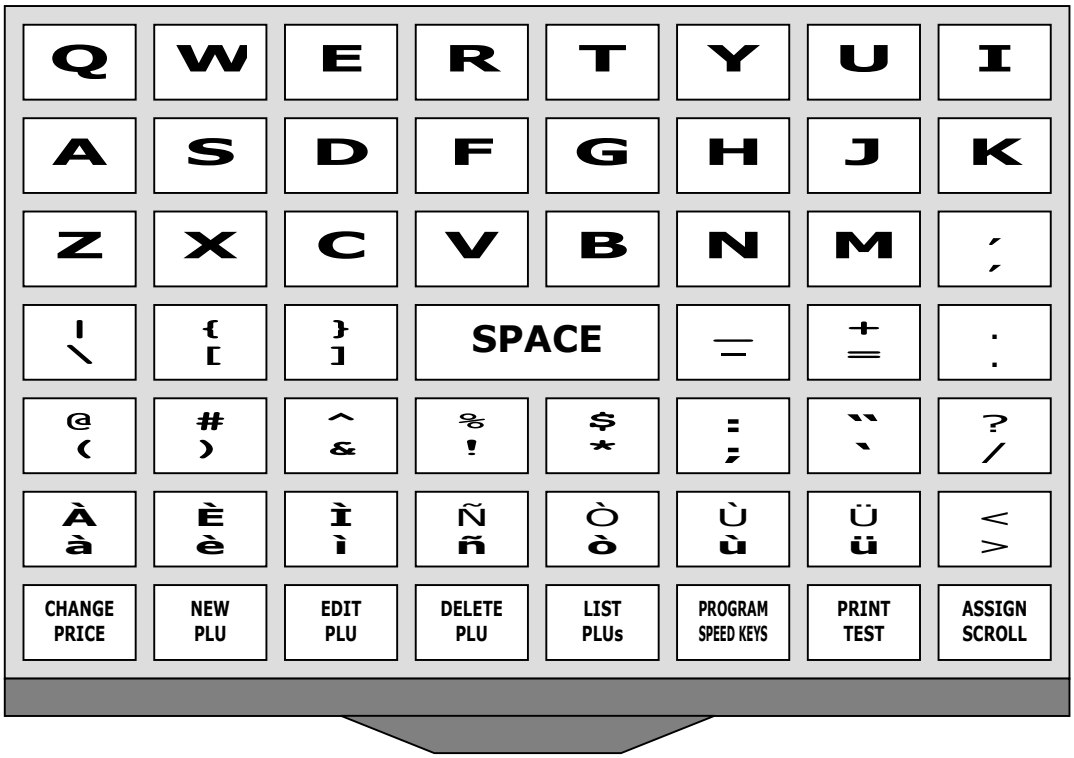

Key	Description
A ~ Z	Alpha keys. Used to type text data.
SPACE	Space bar.
~	Special Symbol keys.
CHANGE PRICE	PLU Price Change key.
NEW PLU	PLU Create key.
EDIT PLU	PLU Edit key.
DELETE PLU	PLU Delete key.

4 Nomenclature

Key	Description
LIST PLUs	PLU Listing key.
PROGRAM SPEED KEYS	Speed Key programming key.
PRINT TEST	Print test key.
ASSIGN SCROLL	Scrolling message assignment key.

5 Quick Set-Up
5.1 Installation of the Label Roll

To install the label roll at ANY time you must follow the directions in this section:

1) Press the **ON/OFF** key and make sure that the display is completely off. Open the printer's side-access panel. As you can see, there is a detailed diagram affixed onto the inside of the side-access panel. Use this diagram (or this manual) for future reference on how to properly install the label roll. (See fig.)

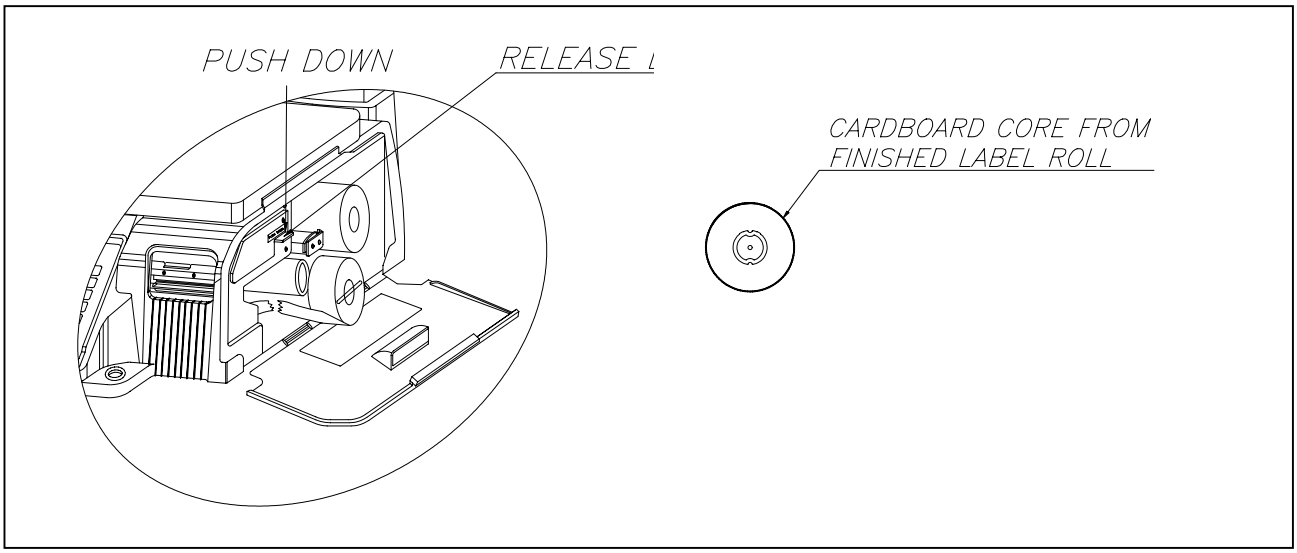

2) Find and remove the Pick-Up Spool assembly and the label-roll Pin. Also, find the Print Head Release Lever and push it in the direction indicated. The print head will be in the "UP" position. If there were any labels previously installed please remove all the collected backing paper from the Pick-Up Spool assembly. The Pick-Up Spool assembly automatically collapses when it is removed from the Pick-Up shaft. This makes the removal of the backing paper very simple. Also remove the cardboard paper roll core if there was a label roll previously installed. (See fig.)

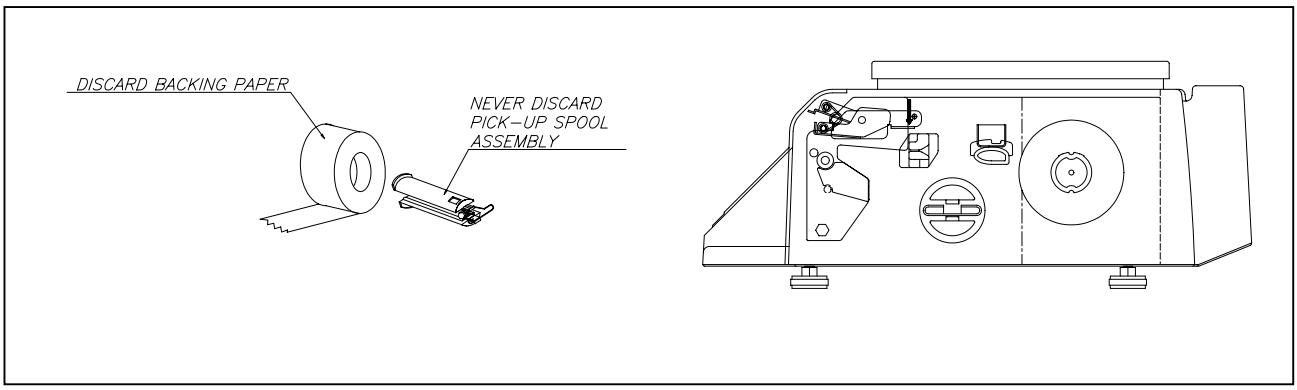

3) Take the new roll of labels and find the ending. Peel-off and discard about one foot (12 inches) of labels from the backing before installing the roll into the scale. Place the label in the scale as shown and thread the backing through the appropriate places. (See fig.)

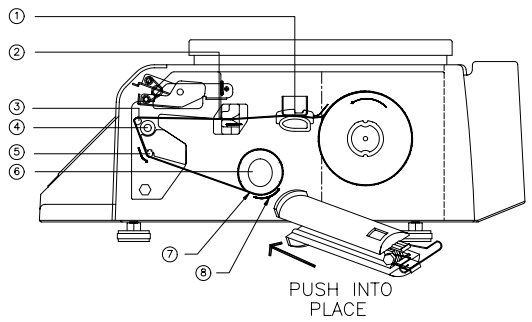

ADJUST AT POINTS 1,2&3 MAKING SURE THAT LABEL IS PUSHED ALL THE WAY TO THE LEFT.

4) Please view the checkpoints on the diagram below as you read these directions to thread the labels.

① Feed the backing paper over the width-adjusting Pressure Shaft lifting the Pressure Plate in order to place the backing between the two making sure that the width adjustment is as exact as possible without bending the backing paper.
② Feed the backing paper inside the slot between the Gap sensor assembly making sure that the labels travel under the Secondary width-adjuster.
③ Make s ure that labels are pushed all the way to the left on the Peel-Off bar.
④ Feed the backing over the Rubber Roller and under the Print Head being careful not to touch the underside of the Print Head.
⑤ Continue to feed the backing paper over the Peel-off Bar.
⑥ Continue to feed it under the Return Roller.
⑦ Feed the backing under and around the Pick-Up Shaft.
⑧ Now attach the Pick Up Spool assembly onto the Pick-Up Shaft and turn it slowly counterclockwise in order to tighten the backing paper.

5) Push the Print Head down in order to lock it back in place. You will feel and hear it lock in place. Close the printer access panel and press the **ON/OFF** key. You have completed the label roll installation. (See fig.)

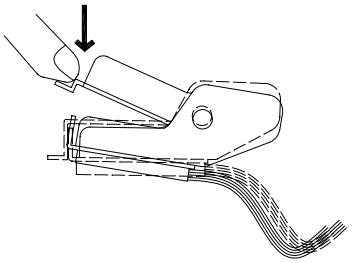

MAKE SURE YOU HAVE DONE THE ADJUSTMENTS AT POINTS 1, 2, AND 3 BEFORE YOU LOCK THE PRINT HEAD.

5.2 Basic Quick Start

1) Turn Power Switch ON if the Power Switch is OFF.

2) After the start-up tests the scale will go to ZERO and show the <REG> mode sales screen.

3) Place an item on the platter.

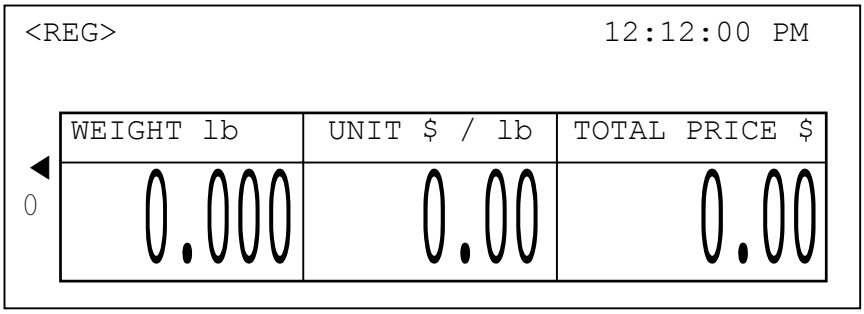

4) Press **Misc Weighed** key and the numbers **1**, **2**, **9**. Then press the **PRINT** key.

5) A label will be issued with a unit price of $1.29. (See fig.)

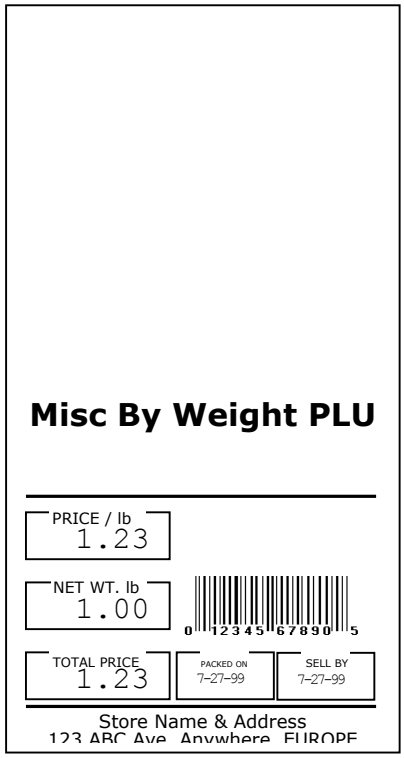

6 Programming

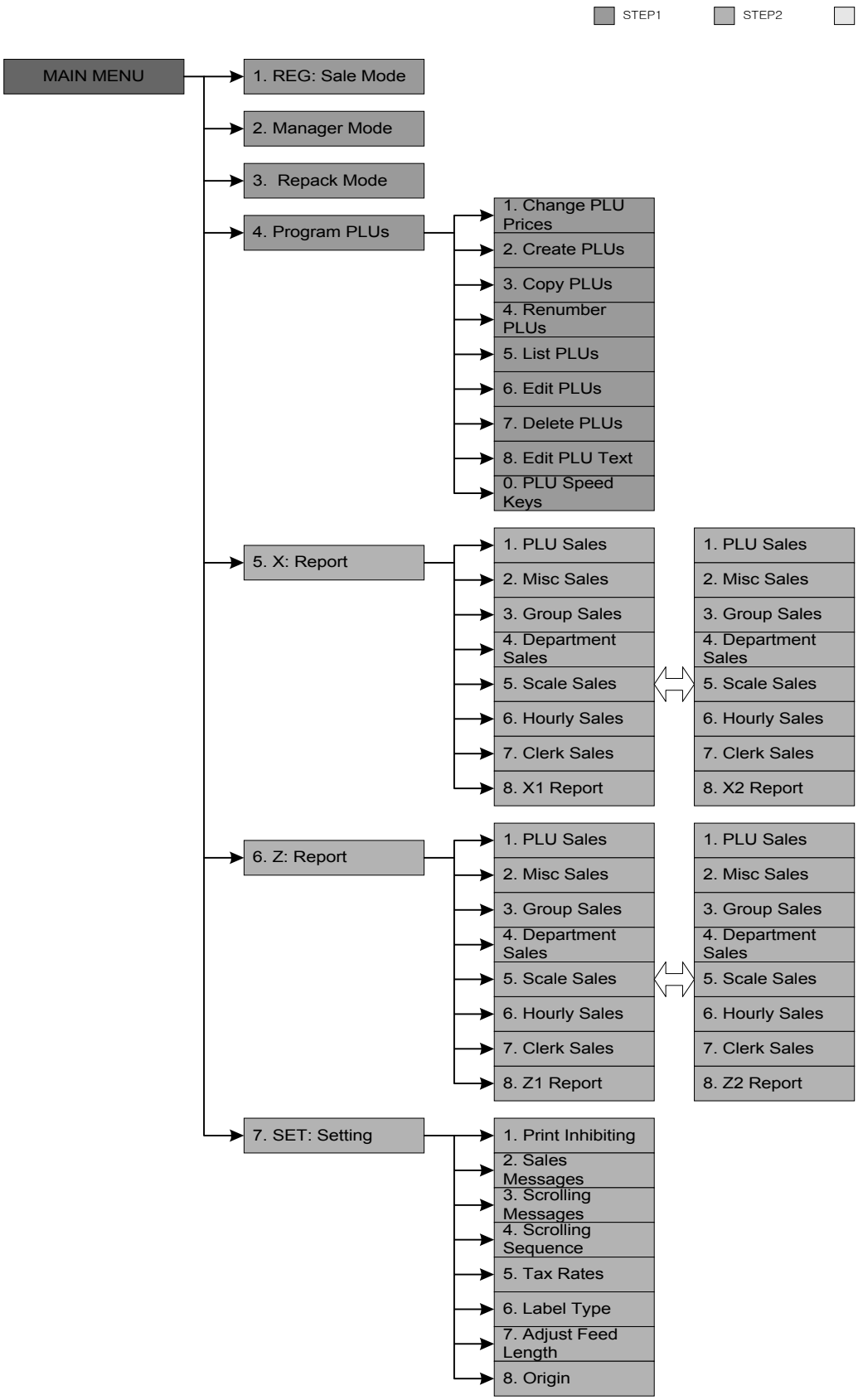

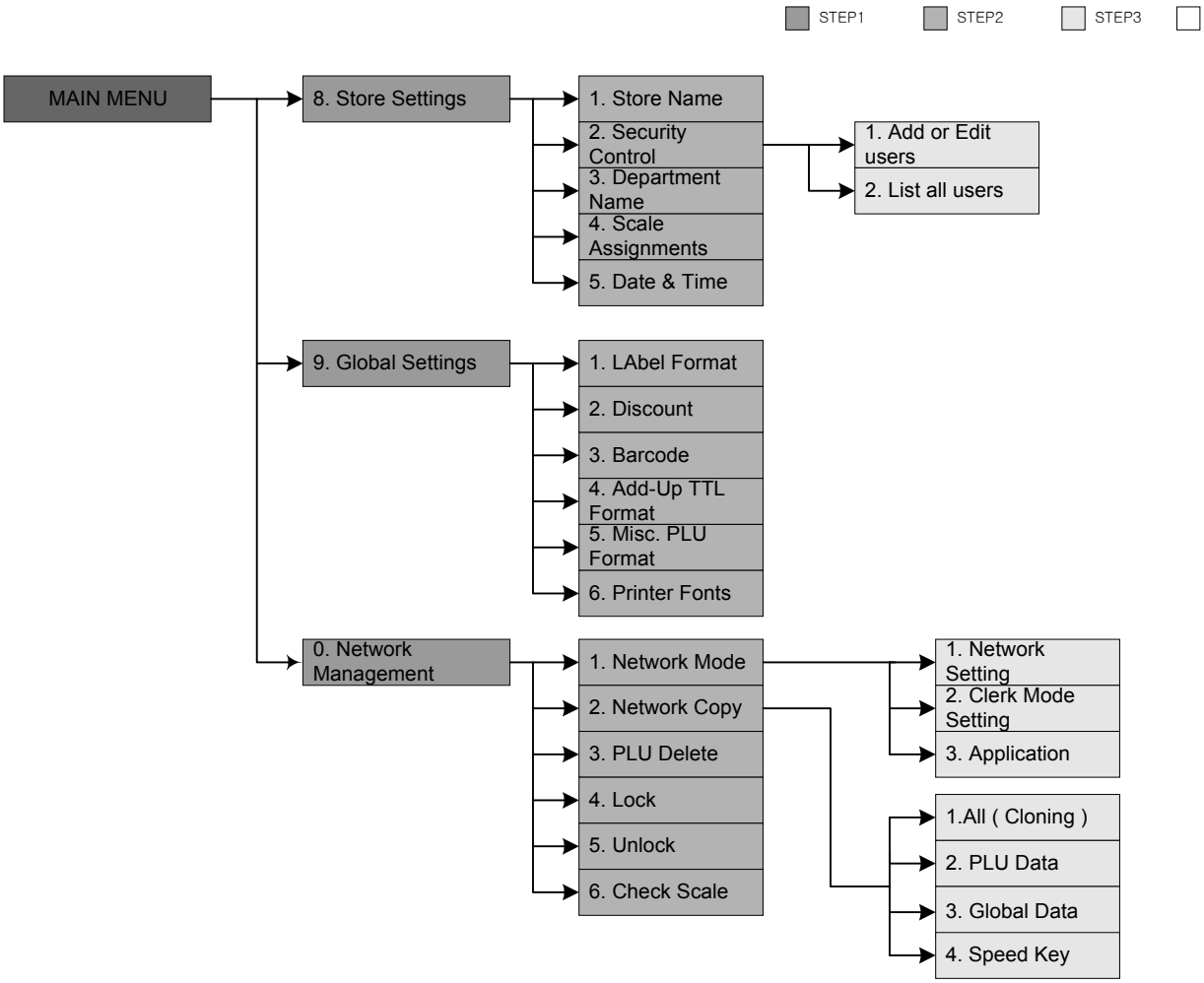

<Program mode Diagram>

6 Programming
6.1 Main Menu

The following highlighted selections from the Main Menu make up the Program Menu.

```
                < MAIN MENU >

1.REG: Sale Mode        6.Z: Report & Clear
2.MGR: Manager Mode     7.SET: Settings
3.RPK: Repack Mode      8.Store Settings
4.PLU: Program PLUs     9.Global Settings
5.X: Report             0.Network Management
```

You will require a level 2 password (or higher) to access any of the highlighted functions. If the scale is new or there are no level 3 passwords programmed, then you can enter **001** and press **ENTER** or **PRINT** at the password screen; otherwise, enter your password here. Remember that if there are ANY level 3 passwords, then **001** will NOT work. When the screen is at the **Main Menu** Press **8** and the screen will read:

```
                              INS/CAPS
        < ENTER LEVEL 2 PASSWORD >

                 [*******]
```

The LP-2 can have up to 99 clerks/users. Each clerk is given a 5 character alphanumeric password. Each password can have any of 4 access levels: 0, 1, 2, or 3. Level 3 access has access to ALL scale functions; where as levels 0 and 1 have minimal access. Each password is also associated with a department number (0 to 32), where 0 grants access to all departments and 1 to 32 grants access to that specific department only. Levels 0 and 1 can only be associated with a department number 1 to 32. Level 3 is only associated with a department access 0. Level 2 can be either.

This allows for user to be assigned to level 1 or 0; managers assigned to level 2 with a specific department; store managers could be level 2 and department access 0; and owner's or MIS can be level 3.

Remember that the only password that you cannot assign to a clerk is **001**. This is because it is the Master Password. You will never see it listed in the List All Users list.

NOTE: The format for entering a password at a password entry screen is as follows: you enter ***XXYYYYY*** where ***XX*** is a compulsory 2 digit Operator ID number and ***YYYYY*** is your password. If you are Operator number 5 and have password ALEX22 then you must enter "**05ALEX22**" at a password entry screen. Passwords are always in CAPS. The scale will automatically correct for lowercase.

6.1.1 Store Settings

Store Settings is used to program many of the scale's features. The Store Settings menu screen appears as follows:

```
< STR: STORE SETTINGS >

  1.Store name
  2.Security Control
  3.Department Names
  4.Scale Assignments
  5.Time & Date
```

Only the Master scale can send program changes across the network. Therefore, if you make any changes to any program items at any scale other than the master, those changes will remain local. Also, if the master scale sends PLU updates or price changes, they will overwrite any changes that have been done locally.

6.1.2 Store Name, Address, & Number

Once at the **STR: Store settings** menu screen, press the **1** key. The Store name screen will appear as follows:

```
                              INS/CAPS
            < STR: STORE NAME >
                         CHAR:    1 OF   50
LINE 1:[                            ]
LINE 2:[                            ]
LINE 3:[                            ]
Store Id Code:[  0]
```

The display will show each line of text and flash a cursor on the first character position of first line. If there was any previous data it will appear as it was stored. Using the arrow keys, position the cursor where you wish to begin typing. Once at the desired position, press the **INSERT/OVER** key if you want the text you are about to type to be overwritten (rather than inserted) at the location where the cursor is at. Remember that in order to get capital letters, the CAPS indicator on the top line must display "CAPS". To toggle the CAPS status you need to press the **SHIFT** key

Begin typing using any text or numeric keys. You can press the ▼ arrow key to go to the next line or the ▲ arrow key to go to the previous line. At any time, you may use the **INSERT/OVER**, **SHIFT**, text/numeric keys, or the Arrow keys to modify your text.
Once you are done, press the **SAVE** key and the scale will store the current data and return to the previous menu. You can also press **ENTER** while the cursor is on the last field and the scale will also save your data and return to the previous menu. At any time you can press the **ESC** key to quit.

Keep in mind that the Store Data and any other printable data will only print if the label format being printed supports the data you are trying to print. Most of the embedded formats have the ability to print the Store Data. Also, keep in mind that the Print Inhibit feature also controls whether or not data prints on a label. Whenever there seems to be some data that you feel should be printing but isn't, check the following 3 things:

1. Make sure that the field in question contains data. For example, if a PLU name is not printing make sure that you programmed the PLU name for the PLU in question.

2. Make sure that the Print Inhibit for that data item is not on. For example, if the Print Inhibit for PLU Name is set, then no PLUs will print the PLU name.

3. Make sure that the label format you are using has a field that you are trying to print. For example, label format 87 has a PLU Name field and it is big enough to print any PLU name.

6.1.3 Security Control

This is where you can add or edit clerk data, passwords, etc. You can also list all clerks in case you have lost track of a clerk. Once at the **STR: Store Settings** menu screen, press the **2** key. The Security Control screen will appear as follows:

```
< STR: SECURITY CONTROL >

    1.Add or Edit Users
    2.List All Users
```

Once at the **STR: Security Control** screen, press the **1** key to add new users or edit existing ones.

```
                                INS/CAPS
< STR: ADD OR EDIT USER >
                          CHAR:   1 OF    9
Clerk (1~99): #[ 1]
        Name:  [JOHN DOE                ]
    Password:  [12345]
 Level (0~3):  [3](0=Inactive)
Dept. (0~32):  [0](0=All)
```

Remember that you cannot see passwords that are higher or equal level as your password, except for level 3, which can see ALL passwords. So, you should always use a level 3 password when you wish to edit all or any existing clerk. All level 3 passwords are implicitly set to Dept. = 0, therefore all level 3 passwords can only be set to Dept. = 0. Level 2 can be assigned to either a specific department, or to Dept. = 0. Levels 1 and 0 CANNOT be assigned a Dept. = 0. Any clerk assigned to Dept. = 0 will have access to any and all departments; however, any clerk with a non-zero department assignment, will only be able to access that department which they are assigned to. This prevents cross-departmental access when it is desired, and allows the assignment of department managers and store manager passwords.

To make a Store Manager password, simply assign that clerk to level 2 and Dept = 0. To make a Department Manager, simply assign that clerk to level 2 and department number = to the department you wish for that clerk to manage. Employees that are only to use the scale in REG mode must be assigned level 1 and a department assignment equal to the department that they shall work in. Level 0 is reserved for future use. **Refer to next page for the various password level requirements of the different screens and functions.**

Pressing the **SAVE** key at any point or the **ENTER** key while the cursor is on the last field will save the current clerk and move on to the next available clerk number. Press the **ESC** key to exit Security Control. Once at the **STR: Security Control** screen, press the **2** key to list all clerks.

```
            < USER LIST >
ID #      Name          Password Level Dept
 1   JOHN DOE              12345   3     0
NO MORE USERS
```

You can use the **Page Up** and **Page Down** keys or the Arrow keys to navigate up and down the list. Be careful when you use this feature. If you do this while others may be looking, they can see the passwords for any user. Press **ESC** to exit this feature.

Screen name or Function	Required Password level
REG mode	*No password protection.*
PLU programming mode	2
PLU Delete	3
MGR mode	2
RPK mode	2
SET mode	2
X mode	2
Z mode	2
STR Settings	2
Global Settings	2

Network Management	3
Quick Program Keys	***Same as respective menu's requirements.***

Key name	Required Password level
RETURN key in REG mode	2
RETURN key in MGR mode	*No password protection.*
OVERRIDE key in REG mode	2
OVERRIDE key in MGR mode	*No password protection.*
VOID key in REG mode	*No password protection.*
VOID key in MGR mode	*No password protection.*
DEPT key in REG mode	2
DEPT key in MGR mode	*No password protection.*
ALT + DATE/TIME key for temporarily date change in REG mode	2
ALT + DATE/TIME key for temporarily date change in MGR mode	*No password protection.*
ALT + ON/OFF key for temporary Print Inhibit of dates (REG)	2
ALT + ON/OFF key for temporary Print Inhibit of dates (MGR)	*No password protection.*
ALT + PLU/SHIFT key for temporary change of PLU data (REG)	2
ALT + PLU/SHIFT key for temporary change of PLU data (MGR)	*No password protection.*

6.1.4 Department Names

Once at the **STR: Store Settings** menu screen, press the **3** key. The Department Name screen will appear as follows:

```
                              INS/CAPS
          < STR: DEPARTMENT NAME >

Dept. Number:[ 1] (1~32)
Dept. Name   :[Bakery Department     ]
```

This is where you can name your 32 departments. It is best to type the name of the department and then the word "Department" so as to make things clear when and if you print department data.

Pressing the **SAVE** key at any point or the **ENTER** key while the cursor is on the last field will save the current department and move on to the next available department number. Press **ESC** to finish.

6.1.5 Scale Assignments

Once at the **STR: Store Settings** menu screen, press the **4** key. The Scale Assignment screen will appear as follows:

```
< STR: SCALE ASSIGNMENT >


Scale Number     :[ 1] (1~32)
Department Number:[ 1] (1~32)
   Bakery Department
```

This is where you assign your scales to specific departments. As you can see, the last line indicates the Department name that you selected in the Department Number field above it. **Note** that for every scale number that you do not plan to have a scale for, assign it to Department 0.

Pressing the **SAVE** key at any point or the **ENTER** key while the cursor is on the last field will save the current Scale Assignment and move on to the next available scale number. Press the **ESC** key to exit Scale Assignment.

6.1.6 Date and Time

Once at the **STR: Store Settings** menu screen, press the **5** key. The Time & Date screen will appear as follows:

```
                          NUMERIC
(1/2)    < STR: SET DATE & TIME >

            Year: [2001]
            Month:  [ 3]
            Day:    [20]
            Hour:   [12] (0-23 Hour)
            Minute: [40]
```

```
                          NUMERIC
(2/2)    < STR: SET DATE & TIME >

    Date Format:   [1] (0=DMY, 1=MDY, 2=MD)
   Month Format:   [1] (0=DEC, 1=12)
    Year Format:   [1] (0=1999, 1=99
    Time Format:   [0] (0=AMPM,1=24hour)
 Data Separator:   [-]
```

Pressing the **SAVE** key at any point or the **ENTER** key while the cursor is on the last field will save the current screen contents and exit. Press the **ESC** key to exit Time and Date.

6.2 Settings

When the screen is at the **Main Menu** Press **7**, enter a level 2 or higher password when prompted, and then the screen will read:

```
             < SET: SETTINGS >

1.Print Inhibiting    5.Tax Rates
2.Sales Messages      6.Label Type
3.Scrolling Messages  7.Feed & Printer
4.Scrolling Sequence  8.Origin
```

You can select from this submenu of options. If you have a network, the first thing you need to program on every scale is the scale number. The scale number programming is done in option 9, Network Mode. Please always make sure that every scale on a scale network (ILSN) has a unique scale number. Failure to do this can cause grave errors in sales totals and programming from the master.

6.2.1 Print Inhibiting

Once at the **SET: Settings** menu screen, press the **1** key. The Print Inhibiting screen will appear as follows:

```
                            OVR/CAPS   /ENG
( 1/ 7)< SET: PRINT INHIBITING >

ALTERNATE CURRENCY       (Y/N): [N]
AMOUNT SAVED             (Y/N): [N]
BARCODES                 (Y/N): [N]
CENTURY                  (Y/N): [N]
COMMODITY NAME           (Y/N): [N]
```

The 2 numbers at top right (1/7) indicate the number of pages or screens. The number to the left of the slash is the current page or screen number and the number to the right of the slash indicates the total number of pages or screens. You can use the **Page Up** and **Page Down** keys to navigate from page to page, or you can use the Arrow keys to go through each page 1 line at a time.

If you set any of the items to Y, then they will NOT print on any labels regardless of the label format. These items are listed in alphabetical order.

Remember that you can press **SAVE** at any time or the **ENTER** key while the cursor is on the last field, in order to save the current screen contents and exit. The **ESC** key exits and returns to the previous menu.

6.2.2 Sales Messages

Once at the **SET: Settings** menu screen, press the **2** key. The Sales Message screen will appear as follows:

```
                          INS/CAPS   /ENG
        < SET: SALES MESSAGE >
                         CHAR:   1 OF   40
    Number  :[ 1] (1~32)
    Message :[                          ]
```

You can link these sales messages to PLUs. They can be printed on PLU labels so long as the format that you use contains a Sales Message field. This is a great tool for advertising and cross-marketing products. Each sales message can be up to 40 characters long.

Remember that you can press **SAVE** at any time or the **ENTER** key while the cursor is on the last field, in order to save the current screen contents and move on to the next available message number. The **ESC** key exits and returns to the previous menu.

6.2.3 Scrolling Message

Once at the **SET: Settings** menu screen, press the **3** key. The Scroll Message screen will appear as follows:

```
                          INS/CAPS   /ENG
        < SET: SCROLL MESSAGE >
                         CHAR:   1 OF   80
    Message No.:[ 1] (1~32)
    Text:[                                ]
```

You can use these scroll messages to advertise or inform your customers of anything you wish. The messages will come on the scale when it is not in use. The order and sequence in which these messages can be displayed is programmed in the Scroll Sequence programming (section **6.2.4**). Each scrolling message can be up to 80 characters long.

Remember that you can press **SAVE** at any time or the **ENTER** key while the cursor is on the last field, in order to save the current screen contents and move on to the next available message number. The **ESC** key exits and returns to the previous menu. If your scale is opened exterior network, restrain this funct ion.

6.2.4 Scrolling Sequence

Once at the **SET: Settings** menu screen, press the **4** key. The Scroll Sequence screen will appear as follows:

```
                                NUMERIC
(1/4)     < SET: SCROLL SEQUENCE >

   Scale Number: (1-32) : [ 1]
   Scroll Delay Time:   [   0] seconds
   First Message Number (0~32) :  [ 1]
   First Message Effect (0~3)  :   [0]
      (Use the TEST key to test.)
```

For every scale, you can choose any 4 of these 32 scroll messages to be displayed on that scale. Each of the 4 can be displayed with different special effects. The messages will come on the scale when it is not in use.

The Scroll Delay Time is the number of seconds that the scale needs to be inactive for the scrolling sequence to begin. **Note,** neither the master show scrolling messages.

The Scroll Effect is the special effects code that determines which special effect to use for that message. Effect 0 simply scrolls a message across the screen from right to left. Effect 1 is the same as effect 0 except that the message also flashes as it scrolls. Effects 2 and 3 will only properly work with 12 character messages. Effect 2 is a curtain effect that scrolls the message from right to left and left to right simultaneously and when the messages intersect at the center, they remain displayed statically for a few seconds. Effect 3 is the same as 2 except that the message will flash for s few seconds when it gets to the center.

To see a message as it will appear when it scrolls, simply press the **TEST** key while the cursor is on message field 1 through 4. The last screen appears as follows:

```
(4/4)     < SET: SCROLL SEQUENCE >

  Fourth Message Number (0~32):  [ 0]
  Fourth Message Effect (0~3) :   [0]
      (Use the TEST key to test.)
```

Remember that you can press **SAVE** at any time or the **ENTER** key while the cursor is on the last field on the last page, in order to save the current screen contents and move on to the next available scale number. You can also use the **Page Up** and **Page Down** keys to navigate through the pages. The **ESC** key exits and returns to the previous menu.

6.2.5 Tax Rates

Once at the **SET: Settings** menu screen, press the **5** key. The Tax Rates screen will appear as follows:

```
< SET: TAX RATES >

Rate 1: [ 0.000] %
Rate 2: [ 0.000] %
Rate 3: [ 0.000] %
```

There are 3 different tax rates that you can use on any PLU. You can program the tax rate here and when you program a PLU, you can select which tax rate you want to be charged on that PLU.

Remember that you can press **SAVE** at any time or the **ENTER** key while the cursor is on the last field on the last page, in order to save the current screen contents and return to the previous menu. The **ESC** key exits and returns to the previous menu.

6.2.6 Label Type

Once at the **SET: Settings** menu screen, press the **6** key. The Label Type screen will appear as follows:

```
Press ALT for Auto Setup     NUMERIC
            < SET: LABEL TYPE >

Type (0-2):[0] 60mm X 41mm Labels
Width      (25-80):  [60] mm= 2.244 inches
Length                41  mm= 1.614 inches
Gap                    3  mm= 0.118 inches
```

For Label Type = 0, you will always see this screen.

```
            < SET: LABEL TYPE >

Type (0-2):[1] 60mm Continuous Strip Label
Width      (25-80):  [60] mm
Length     (0-170): [ 41] mm= 1.614 inches
Rcpt Feed  (0-170): [ 15] mm= 0.118 inches
```

For Label Type = 1 or 2, you will always see this screen.

Label Type 0 is the standard fixed sized label media with liner backing paper. The Length value is the length of the label itself. To capture the Length value, press the ALT key twice. The scale will feed out several labels and automatically detect the length and the gap size. Please make sure that you have standard "gapped" labels in the printer whenever you execute this procedure.

Label Type 1 is continuous strip label media with liner backing paper. The **Feed** value determines the amount of labels/paper to feed when you press the **FEED** key. The **Feed** value can be 0 mm to 170 mm.

Label Type 2 is continuous strip label media or receipt thermal paper **both without** liner backing paper. Type to works the same as Type 1 except that the pick-up motor will not operate as there should be no liner to pick-up.

The **Width** value is the width of the label or paper and NOT the width of the liner backing paper. It must be specified in millimeters. If this value is incorrect then some label formats may print properly but no receipts will print properly. Please make sure to set this value properly. The **Width** can be from 20 mm to 80 mm.

The **Rcpt Feed** value is the amount of blank space to feed after each receipt or label is printed. This is done so that the paper cut can tear the receipt or label properly. The **Rcpt Feed** can be from 0 mm to 170 mm. The **Rcpt Feed** is only for type 1 or 2.(recommendation Rcpt Feed is 15mm)

Remember that you can press **SAVE** at any time or the **ENTER** key while the cursor is on the last field in order to save the current screen contents and return to the previous menu. The **ESC** key exits and returns to the previous menu.

6.2.7 Adjust Feed Length

Once at the **SET: Settings** menu screen, press the **7** key. The Adjust Feed Length screen will appear as follows:

```
                                NUMERIC
        < SET: ADJUST FEED LENGTH >

    Feed Adjustment :[100] (0-200)

   Use FEED key to test.
   Use SAVE or ENTER key to save
```

The Feed Adjustment is a fine adjustment that controls the print position from top-to-bottom on a label. The higher the number, the higher the printing will appear. The lower the number, the lower the printing

will appear. The norm is 100. 1 Feed Adjustment is 1/8 of a millimeter, therefore if you change the Feed Adjustment from 100 to 108, then everything will print 1 mm higher on the label.

You can also use this feature to make sure that when you print a label, it will come out far enough to be easily removed from the liner backing paper. For example, if the label feeds out too far then the labels may fall-off after they print. If the label does not feed out far enough, then the labels may need to be pulled-on after they print.
Another reason to change this value is when you use labels with pre-printed lines and boxes. In this case, you may need to change the Feed Adjust so that fields are printed in the right places.

You may also find that changing label stock, type, or formats may require you to fine adjust the Feed Adjust setting. However, you will find that when you use the same label stock, you will get very similar results. Make sure to always use CAS Certified media. Using poor quality media whether it be thermal paper or labels, may damage your LP-2's thermal print head and void the warrantee. Consult you CAS Authorized dealers about where you can purchase the media you require. Also, they can help you with custom labels and customs formats.

Remember that you can press **SAVE** or **ENTER** at any time in order to save the current screen contents and return to the previous menu. The **ESC** key exits and returns to the previous menu.

6.2.8 Origin

Once at the **SET: Settings** menu screen, press the **8** key. The Origin selection and input screen will appear as follows:

```
                                NUMERIC
            < SET : ORIGIN >

  Origin No.:[ 256]
  Text : [                              ]
```

Enter the number of origin. You can select origin number from 256 to 400. (the origin number from1 to 255 is reserved.)
And input Origin. Maximum characters are 25.

Remember that you can press **SAVE** or **ENTER** at any time in order to save the current screen contents and return to the previous menu. The **ESC** key exits and returns to the previous menu.

6.3 PLU Programming

When the screen is at the **Main Menu** Press **4**, enter a level 2 or higher password when prompted, and then the screen will read:

```
             < PLU: PLU DATA >

1.Change PLU Prices     6.Edit PLUs
2.Create PLUs           7.Delete PLUs
3.Copy PLUs             8.Edit PLU Text
4.Renumber PLUs         9.PLU Speed keys
5.List PLUs
```

6.3.1 PLU Price Change

Once at the **PLU: PLU Data** screen Press **1**. The PLU Price Change screen will appear as follows:

```
                              NUMERIC
         < PLU: CHANGE PRICE PLU >

Dept. Number:     [ 1] Bakery Department
PLU   Number:[      1] Yellow Sheet Cake

Press ALT for memory status
```

Enter the Department number of the PLU you wish to change the price of and press **ENTER**. Next, enter the PLU number you wish to change the price of; remember that it MUST be an existing PLU or you will get a *PLU not found* error message. After you have selected the appropriate PLU, press the **ENTER** key and you will move on to one of the various Price Change screens. Remember, you can press the **ESC** key from the **PLU: PLU Price Change** screen to return to the previous screen.

The Price change screens differ for the different PLU types. Here are the 3 possible screens:

```
                                NUMERIC
  < CHANGE PRICE BY-WEIGHT PLU      1 >


Price        :    [    1.00]/kg
Sale Weight  :      [ 0.000] kg
Sale Price   :   [    0.00]/kg
```

By-Weight PLU

```
                                NUMERIC
   < CHANGE PRICE BY-COUNT PLU      1 >

Net Weight : [  2]          (g)
Count      : [  3] pcs
Price      :    3 FOR $[   1.00]
Sale Count : [ 20] pcs
Sale Price :    3 FOR $[   0.90]
```

By-Count PLU

```
                                NUMERIC
   < CHANGE PRICE NON-FOOD PLU      3 >

Price             : $[   4.56]
```

Non-Food PLU

You can press **SAVE** at any time or the **ENTER** key while the cursor is on the last field in order to save the current screen contents and return to the previous menu. The **ESC** key exits and returns to the previous screen. This way you can effect price changes to several different PLUs. For changing the prices of a large amount of PLUs, like 300 or so, it is recommended that you purchase the full-version of the SP-2 Scale Software Package to more quickly and efficiently effect such large price changes. Please inquire about the SP-2 Package at your CAS Authorized Dealer.

6.3.2 Creating PLUs

Once at the **PLU: PLU Data** screen Press **2**. The PLU Create screen will appear as follows:

```
            < PLU: CREATE PLU >

Dept. Number:     [ 1] Bakery Department
PLU   Number:[     10]

Press ALT for memory status
```

Enter the Department number that you wish to assign to the PLU you are about to create and press **ENTER**. Next, enter the PLU number you wish to create; remember that it MUST be a *non-existing* PLU or you will get a *PLU ALREADY EXISTS* error message. After you have selected the appropriate PLU, press the **ENTER** key or **SAVE** and you will move on to the Select PLU Type screen. Remember, you can press the **ESC** key from the **PLU: PLU Create** screen to return to the previous screen.

```
            < SELECT PLU TYPE >
PLU : 10
              1. BY-WEIGHT <--
              2. BY-COUNT
              3. NON-FOOD
```

By-Weight PLUs are priced as *price-per-weight;* for example, $3.99/lb or $1.99/kg. You must weigh these PLUs before you can execute a sales transaction. **By-Weight** PLUs can have a TARE weight, a Sale Weight, and Sale Price for discounting. *This includes ALL food that is sold by weight.*

By-Count PLUs are priced as *pieces-for-price;* for example, 3 FOR $3.99. Before you execute a **By-Count** sale transaction you may specify a Quantity so as to be able to multiply and do split pricing; for example, 6 AT 3 FOR $1.00 gives you a Total Price of $2.00. You must have a QTY, PIECE, and PRICE all greater than 0 before you can execute a sales transaction. **By-Count** PLUs can have a Net-Weight Statement (in ounces or grams), a Sale Count, and Sale Price for discounting. *This includes ALL food that is NOT sold by weight.*

Non-Food PLUs are priced a *Straight-price;* for example, $3.99. You must have a Total Price greater than 0 before you can execute a sales transaction. *This includes ALL NON-FOOD items.*

NOTE: ALL of the label formats embedded in the scale are compliant.

Once you have selected a PLU type you will get the following screen depending which PLU type you selected:

* If you select that you don't use **Global Label Format**, you have to assign label format about each PLU.

```
                              INS/CAPS  /ENG
( 1/6) < CREATE BY-WEIGHT PLU     10 >

                        CHAR:     1 OF   38
Name Line 1 :[This is a By-Weight PLU     ]
Name Line 2 :[                            ]
Name Line 3 :[                            ]
```

By-Weight PLU Screen 1 of 6.

```
                             INS/CAPS  /ENG
( 1/6) < CREATE BY-COUNT PLU     11 >

                        CHAR:     1 OF   38
Name Line 1 :[This is a By-Count PLU      ]
Name Line 2 :[                            ]
Name Line 3 :[                            ]
```

By-Count PLU Screen 1 of 6.

```
                             INS/CAPS
( 1/ 4)   < CREATE NON-FOOD PLU     12 >

                        CHAR:     1 OF   38
Name Line 1 :[This is a Non-Food PLU      ]
Name Line 2 :[                            ]
Name Line 3 :[                            ]
```

Non-Food PLU Screen 1 of 4.

You can press the **SAVE** key at anytime to save the current PLU data and return to the **PL: PLU Create** screen. After you enter the Label Format number, you can press the **TEST** key at any time to get a preview print-out of what the PLU will look like. ***See Appendix B for Label Format suggestions and samples.*** Remember, you can use the Arrow keys, **PAGE UP**, and **PAGE DOWN** keys to navigate through the pages and fields. The **ENTER** key will also move you from field to field. Pressing **ESC** at anytime will prompt you with the message *ABANDON CHANGES TO LAST PLU (Y/N)?* If you press **Y** then the scale will disregard ALL of the current PLU's data which you have entered and return to the previous menu. If you press **N** then the scale will return to whichever page you were on when you pressed the **ESC** key.

The first 15 characters of the Label Format's name appears to the right of the Label Format number field.

You can get to the next page by pressing **PAGE DOWN**. You can also get to the next page by pressing **ENTER** or the ↓ key while the cursor is on the last field of the page. This is true for any page of the PLU Create screens.
The next section looks like this:

```
                                NUMERIC
( 2/6) < CREATE BY-WEIGHT PLU     10 >


Group Code    (0-99)       : [ 0]
Tax Rate Code: [0]  No Tax
Sales Message : [ 0] Message not found
Country of Origin : [  0] Not assigned
```

By-Weight PLU Screen 2 of 6.

```
                                NUMERIC
( 2/10) < CREATE BY-COUNT PLU     11 >


Group Code    (0-99)       : [ 0]
Tax Rate Code (0-3)        : [1]  7.2500%
Sales Message : [ 1] SALE on frozen shrimp
Country of Origin : [  0]
```

By-Count PLU Screen 2 of 6.

```
                                NUMERIC
( 2/ 4) < CREATE NON-FOOD PLU     12 >

Price             : $    [    1.56]
Group Code  (0-99)     : [ 0]
Tax Rate Code (0-3)    : [3]  9.0000%
Sales Message : [ 0]
Country of Origin : [  0]
```

Non-Food PLU Screen 2 of 4.

Group Code: This is a number you can assign to each PLU. It can be from 0 to 99. You can use this to group PLUs together or as a sub-department grouping.

Tax Rate Code: For ALL PLUs, this is the Tax Rate (1, 2, or 3) which will be charged by this PLU. If it is 0 then no tax will be charged.

Sales Message: For ALL PLUs, this is where you can link one of 32 sales messages to a PLU. When you select a sales message, the first 17 characters of that message are shown on the screen to the right of the Sales Message number field.

Country of Origin Code: For ALL PLUs, this is a 3 digit code that can be used to print a Country of Origin Name on a Label (assuming the label has been formatted properly). To see the values for Country Codes, go to Appendix A.

Price: For Non-Food PLUs, this is the Total Price of that PLU.

The next section looks like this:

```
Press TEST to weigh TARE.
( 3/6) < CREATE BY-WEIGHT PLU     10 >

Tare Weight        : -[ 0.00]kg
Price              :  $[   1.00]/kg
Sale Weight        :   [10.000] kg
Sale Price         :  $[   0.90]/kg
```

By-Weight PLU Screen 3 of 6.

```
( 3/6) < CREATE BY-COUNT PLU     11 >

Net Weight(oz)     : [  39]
Count              : [  3] pcs
Price 3 FOR   $ [   1.00]
Sale Count         : [ 10] pcs
Sale Price 3 FOR $[   0.90]
```

By-Count PLU Screen 3 of 6.

```
( 3/ 4) < CREATE NON-FOOD PLU     12 >

UPC Code :[    12]
Barcode Type  :[0]
Barcode Format:[1]
```

Non-Food PLU Screen 3 of 4. **See page 52.**

Tare Weight: (*For By-Weight PLUs only)* This is the weight of the container that this PLU will be packaged in. You can enter the tare weight manually or by placing a container on the platter. While the cursor is on the Tare Weight field, place the tare item on the platter making sure that the weight in the Weight field is zero, and then press the **ALT** key. If the weight in the Weight field is not zero, press the Clear key while the cursor is on the Tare Weight field.

Net Weight: (*For By-Count PLUs only)* This is the Net Weight Statement in pound-ounce or grams that is required for food PLUs that are not sold by weight.

Price: (*For By-Weight PLUs only)* This is the price per pound or price per kilogram for the PLU. The Weighing Unit field determines whether this is priced as an lb or kg PLU.

Count: (*For By-Count PLUs only)* this determines the number of pieces sold for a given price. See By-Count Price.

Price: (*For By-Count PLUs only)* this determines the pricing structure. If Count = 3 and Price = 1.00 then the pricing structure is 3 FOR $1.00.

Sale Weight & Sale Price: (*For By-Weight PLUs only)* This is the price per pound or price per kilogram for the PLU. If Weigh Unit = 1 (kg), Price = 2.00, Sale Weight = 10.000 kg, and the Sale Price = $1.00, then whenever the Net Weight is greater than or equal to 10.000 kg this PLU is sold at $1.00-per-pound.

Sale Count & Sale Price: For By-Count PLUs, this determines the sale pricing structure. If Sale Count = 9, Sale Price = 1.00, Count = 3, and Price = 2.00, then whenever you sell 9 or more pieces the price structure is 3 FOR $1.00 as opposed to 3 FOR $2.00.

The next section looks like this:

```
                                NUMERIC
( 4/6) < CREATE BY-WEIGHT PLU     10 >

Sell By Date : [ 20] days
Cook By Date : [ 20] days
```

By-Weight PLU Screen 4 of 6.

```
( 4/6) < CREATE BY-COUNT PLU     11 >

Sell By Date : [ 20] days
Cook By Date : [ 20] days
```

By-Count PLU Screen 4 of 6.

Sell/Cook By Dates: These are expirations dates that are numbered in days and added to the Packed On date in order to be calculated.

Remember, at any time during PLU Creation, if you press the **SAVE** key you will save the current PLU's contents and return to the Department/PLU number entry screen.

Unlike many older printing scale, the LP-2 does not automatically print program verification labels. If you want a program verification label, you must press the **TEST** key after you have properly selected that PLU's label format number. To see sample label formats for the 3 MISC PLUs, go to section **Appendix B: Label Formats**.

Don't forget that there are more screens left to fully complete PLU programming. The next screens add UPC barcode numbers, Ingredients text, optional text, and NutriFacts data. So if you are not interested in programming any of these features into your PLU's, then you can stop here by pressing the **SAVE** key and moving on to programming the next PLU.

If you do wish program UPC barcode numbers, Ingredients text, optional text, and/or NutriFacts data, then you must proceed to the next screens of PLU programming located on the next page.

The next section looks like this:

```
( 5/6) < CREATE BY-WEIGHT PLU     10 >

Code: [    10]
Barcode Type  :[0]
Barcode Format:[1]
```

By-Weight & By-Count PLU Screen 5 of 6 and
Non-Food Screen 3 of 4.

```
( 5/6) < CREATE BY-WEIGHT PLU     10 >

Code :[    11]          0=UPC-12  3=EAN-8
Barcode Type  :[0]      1=UPC-13  4=Code 39
Barcode Format:[1]      2=EAN-13  5=I2of5
```

By-Weight & By-Count PLU Screen 5 of 6 and
Non-Food Screen 3 of 4.

```
( 5/6) < CREATE BY-WEIGHT PLU     10 >

Code :[    12]          0=Custom Barcode
Barcode Type  :[0]      1=DNNNNNVPPPP
Barcode Format:[0]      2=DNNNNVPPPPP
                        3=DNNNNNNPPPP
                        4=DNNNNNWWWWW
```

By-Weight & By-Count PLU Screen 5 of 10 and
Non-Food Screen 3 of 4.

The barcode screen is identical for all 3 PLU types. The screen contents change depending upon which field the cursor is on.

- If the cursor is Code field then the screen will look like the first one on this page.
- If the cursor is on the Barcode Type field then the screen will look like the second one on this page.
- If the cursor is on the Barcode Format field then the screen will look like the third one on this page.

The Custom field can ONLY be accessed if the Barcode Format is set to 0, otherwise this field is not seen. The characters below are the only acceptable input for the Custom field.

The following defines the format characters for Barcode Formats:

• G = Group Code	• D = Dept. #	• V = Price Checksum	• 0~9 = Numbers
• P = Total Price	• W = Weight	• K = Country Code	• N = Code
• T = Text3 Data	• Z = Special Checksum	• A = Customer Number	• B= Transaction Counter

Code: For ALL PLUs, this defaults to be the same as the PLU number. In most cases it is easiest to keep the UPC Code and the PLU number the same; however, if necessary you can cahnge the UPC Code to be whatever 6 digit number you would like.

Barcode Type: This allows you to select from a list of Barcode types. There is an entire area-of-expertise devoted to Barcodes and barcode types, much too extensive to be covered here. All you need to know is that the scale by default sets the Barcode Type to the standard required for food PLUs (UPC-12). This covers all By-Weight and By-Count PLUs.

Barcode Format: This allows you to further customize a Barcode type to a more specific style. All you need to know is that the scale by default sets the Barcode Format to the standard

required for food PLUs (DNNNNNVPPPP). This covers all By-Weight and By-Count PLUs.

Custom: If you select the Barcode Format to be 0, then you can create your own custom format with up to 40 characters. You can use *Compressed Formatting* to get more than 40 characters. For example, a format string of "42T" tells the scale that you want a format string with 42 alphanumeric characters which the scale will get from the TEXT 3 field of your PLU.

The next section looks like this:

```
                              INS/CAPS     /ENG
( 6/6) < CREATE BY-WEIGHT PLU     10 >

                          CHAR:    1 OF 2000
Block 1:[_                                  ]
Block 2:[                                   ]
Block 3:[                                   ]
```

By-Weight PLU Screen 6 of 6.

```
                                 INS/CAPS
( 6/6) < CREATE BY-COUNT PLU     11 >
                          CHAR:    1 OF 2000

Block 1:[_                                  ]
Block 2:[                                   ]
Block 3:[                                   ]
```

By-Count PLU Screen 6 of 6.

```
                                INS/CAPS
( 4/ 4) < CREATE NON-FOOD PLU     12 >
                          CHAR:    1 OF 2000

Block 1:[                                 ]
Block 2:[                                 ]
Block 3:[                                 ]
```

Non-Food PLU Screen 4 of 4.

The Ingredients screen is identical for all 3 PLU types. You have up to 2000 characters of Ingredients or Optional Text. You can split the 2000 characters into 3 sections and these 3 sections can print in different font size, style, effects, and location on a label depending upon its format. Block 3 can also be used to embed alphanumeric characters for a barcode.

If you wish to enter a <CR> carriage return, you must use press the **ALT** key followed by the **ENTER** key.

6.3.3 Copying PLUs

Once at the **PLU: PLU Data** screen Press **3**. The Copy PLU screen will appear as follows:

```
                              NUMERIC
               < PLU: COPY PLU >

From  Dept. Number:     [ 1] Bakery Department
        PLU Number:[     10] By-Weight PLU
Through PLU Number:[    110] PLU Not found
To    Dept. Number:     [ 2] Meat Department
        PLU Number:[    100] PLU Not found
```

From Dept. #: Enter the Department number of the PLU which you wish to copy.

From PLU #: Enter the PLU number of the PLU which you wish to copy.

Through PLU #: Enter the total number of PLU which you wish to copy

Copy to Dept. #: Enter the Department number where the new PLU(s) will be located.

Copy to PLU #: This number defaults to be the next highest-available PLU number in the *Copy to Dept. #* department field. Enter the PLU number that you wish to copy the Source PLU into.

When you have entered ALL of the appropriate data and you are ready to copy, press the **SAVE** key. If the cursor is on the last field, you have entered ALL of the appropriate data, and you are ready to copy then press the **ENTER** key. You can press the **ESC** key to return to the previous screen or menu.

6.3.4 Renumbering PLUs

Once at the **PLU: PLU Data** screen Press **4**. The Change PLU Number screen will appear as follows

```
                                    NUMERIC
          < PLU: CHANGE PLU NUMBER >

From Dept. Number:     [ 1] Bakery Department
       PLU Number:[   110] By-Weight PLU
To   Dept. Number:     [ 1] Bakery Department
       PLU Number:[   111] By-Weight PLU
```

When you have entered ALL of the appropriate data and you are ready to copy, press the **SAVE** key. If the cursor is on the last field, you have entered ALL of the appropriate data, and you are ready to copy then press the **ENTER** key. You can press the **ESC** key to return to the previous screen or menu.

6.3.5 Listing PLUs

Once at the **PLU: PLU Data** screen Press **5**. The List PLUs screen will appear as follows:

```
                              NUMERIC
               < LIST PLUs >

          Dept. Number (1-32): [ 1]
```

When you have entered selected a specific department , you can press the **SAVE** key or press the **ENTER** key. You can press the **ESC** key to return to the previous screen or menu.

```
          < PLU LIST >
DEPT  PLU    NAME
  1      10  By-Weight PLU
  1      11  By-Count PLU
  1      12  Non-Food PLU
  1      13  By-Weight PLU
  1      14  By-Weight PLU
```

You can navigate through the pages using the Arrow keys or the **PAGE UP** and **PAGE DOWN** keys. Press **ESC** key to finish and return to the previous screen.

6.3.6 Edit PLUs

Once at the **PLU: PLU Data** screen Press **6**. The Edit PLU screen will appear as follows:

```
                              NUMERIC
             < PLU: EDIT PLU >

Dept. Number:     [ 1] Bakery Department
PLU   Number:[     10]

Press ALT for memory status
```

The Edit PLU program works exactly like the Create PLU program except that you can only enter PLU numbers for existing PLUs, all other PLU numbers will give you *PLU DOES NOT EXIST* error. You can follow the instructions from section **6.3.2 Creating PLUs**.

6.3.7 Deleting PLUs

Once at the **PLU: PLU Data** screen Press **7**. The Delete PLU screen will appear as follows:

```
                              NUMERIC
            < PLU: DELETE PLU >

Dept. Number:     [ 1] Bakery Department

From PLU Number:[   100] By-Weight PLU
To   PLU Number:[   110] By-Weight PLU
```

Department Number: This is the department number of the PLU(s) you wish to erase.

Delete from PLU #: This number defaults to be the lowest-available existing PLU number. Enter the PLU number that you wish to delete.

To PLU #: This number defaults to be the same as whatever you enter in to *Delete From PLU #*. If you wish to delete an entire range of PLUs, enter the high end range PLU # here. In our example, we will delete PLUs #100 through #110 of department #1.

When you have entered ALL of the appropriate data and you are ready to copy, press the **SAVE** key. If the cursor is on the last field, you have entered ALL of the appropriate data, and you are ready to copy then press the **ENTER** key. You can press the **ESC** key to return to the previous screen or menu.

6.3.8 Edit PLU Text

Once at the **PLU: PLU Data** screen Press **8**. The Edit PLU screen will appear as follows:

```
                                NUMERIC
              < PLU: EDIT PLU >

Dept. Number:     [ 1] Bakery Department
PLU   Number:[     10]
```

The Edit PLU Text program ONLY edits the text Blocks 1, 2, and 3 of any existing PLU. It works exactly like the Create PLU program for text Blocks 1, 2, and 3 except that you can only edit the Text Blocks from each PLU.

You can follow the Text Block programming instructions from section **6.3.2 Creating PLUs**.

6.4 Speed Key Programming

Once at the **PLU: PLU Data** screen Press 9. The Speed Keys screen will appear as follows:

```
                                NUMERIC/SHIFT
              <PLU: SPEED KEYS>

 SPEED KEY:  1
PLU Number: [123456] Ground Beef Family Pac

Press SAVE or ENTER to save changes.
Press ESC to finish.
```

Press the ESC to finish.

Press a Speed key or SHIFT and a Speed key to view its settings.

To program a Speed key: press a Speed key or SHIFT and a Speed key, enter a PLU number, and then press the ENTER key or SAVE key to save that PLU to that key.

If you type a PLU number and then press a Speed key then that Speed key will be assigned to that PLU number.

6.5 Global Settings

When the screen is at the **Main Menu** Press **9**, enter a level 2 or higher password when prompted, and then the screen will read:

```
            < GLOBAL SETTINGS >

1.Label Format        4.Add-Up TTL Format
2.Discount            5.MISC. PLU Format
3.Barcode             6.Printer Font
```

From here you can select the various Global Options. The Global label Format option allows you select a label format that will override each PLU's label format or allow you to use each PLU's label format.

```
          < GLOBAL LABEL FORMAT >

Label Format: [ 99] Universal 50 X 45mm
Use Global Label Format? (Y/N): [Y]
```

If you select N then all the PLU's will print using their respective PLUs. And when you create PLU, you have to assign Label format.; if you select Y then the label format you select will be printed for all PLU's. And When you create PLU, you don't need to assign label type. However, MISC PLUs will not print using these formats. MISC PLUs formats cannot be overridden; to do so, you need to have your CAS Authorized Dealer disable the MISC PLU keys and then you can program 3 PLUs to take their place.

```
            < Discount Setting >

Discount Percent: [ 0]%
Use Global Discount?     (Y/N): [N]
```

If you select Y then all of your PLU's will be discounted by the percent entered on the Discount Percent; however, if the Discount Percent is set to 0, then no Global Discount will take place. The DISC prompt

will be displayed in Sales mode whenever a global discount occurs. Remember that the scale automatically

6.6 Network management

Refer to network manual

7 Sale Modes
7.1 REG, MGR, and RPK Modes

The following highlighted selections from the Main Menu make up the Sale Modes.

```
                < MAIN MENU >

1.REG: Sales Mode      6.Z: Report & Clear
2.MGR: Manager Mode    7.SET: Settings
3.RPK: Repack Mode     8.STR:Store Settings
4.PLU: Program PLUs    9.Global Settings
5.X: Report            0.Network Management
```

All regular sales transactions should be done in REG mode. For security reasons, REG mode has limited access to certain features that can be accessed either through the entry of a level 2 password, or by accessing MGR mode. You can change modes during, before, or after an operation. MGR mode and RPK mode access require a level 2 password. All three modes work the same way and display the same things except that they will display their respective Mode names (REG, MGR, or RPK) in the upper-left side of the top-line on the display.

For details on password level requirements, see section **6.1.3 Security Control**.

7.2 REG Mode

Pressing the **ESC** key from the Main Menu will take you to REG mode. The REG mode screen looks like this:

```
<REG>                          12:12:00 PM

  | WEIGHT lb    | UNIT $ / lb  | TOTAL PRICE $ |
◀ |              |              |               |
0 |     0.000    |     0.00     |       0.00    |
```

From here you can make sales transactions or operate any key or sales function. In this state the Weight, Unit Price, and Total Price displays will function but no labels or receipts can be issued until you select a PLU or Misc. PLU.

This is the final screen that comes up whenever you power on the scale. You can press the **MENU** key to go to the Main Menu from here.

7.2.1 ZERO Key

From the REG mode screen, we can use the **ZERO** key to correct for a deviation from zero as long as there are no PLUs or MISC PLUs called-up. The weight can sometimes drift from zero due to debris on the platter, leaving objects on the platter for excessive periods of time, or other environmental factors. To correct this, remove everything from the platter and press the **ZERO** key when the stable indicator "0 " is on. Below is a possible zero drifted state that should be corrected by simply pressing the **ZERO** key.

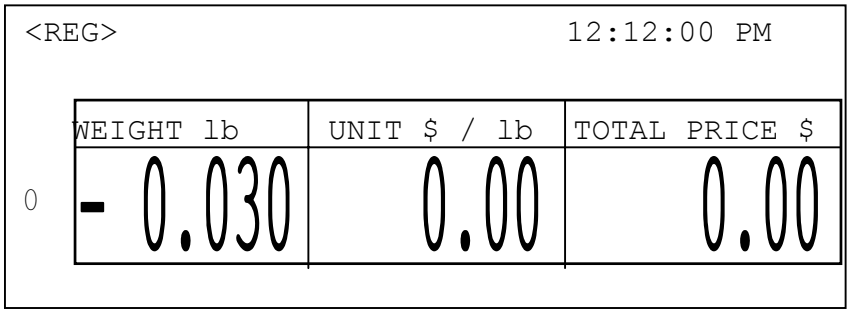

7.2.2 TARE Key

From the REG mode screen, you can also enter tare weights as long as there are no PLUs or MISC PLUs called-up. If you need to temporarily override a PLU's tare weight, you must enter the tare weight first and then call-up that PLU. There are two ways to enter a tare weight and both ways will only work if there is no PLU or MISC PLU called-up. When you call up the PLU that be assigned tare, you have to delete tare in Sale (REG mode) mode. If you do not delete tare in REG mode, you can't call up PLU

Tare Type	Comments
Manual tare entry	The weight must be stable and at Gross Zero. Entering a tare weight manually by pressing the numeric keys and then the TARE key.
Weighed tare entry	The weight must be at Gross Zero. Place the empty container on the platter making sure that the weight is stable, and then press the TARE key.
Clearing both Tare types	Make sure that there is nothing on the scale and the weight is stable. Press the TARE key to remove the tare.
Temporary Clearing Pre-Programmed Tares	If you wish to temporarily use a PLU without its pre-programmed tare, simply call-up that PLU and press the TARE key to toggle between no tare and the pre-programmed tare. When doing this, the weight must be stable and the Gross Weight must be greater than or equal to zero.
Successive Tare	See the Index and Glossary section for details.

If you enter a tare of 0.01 lb the display should look like this when there is nothing on the platter:

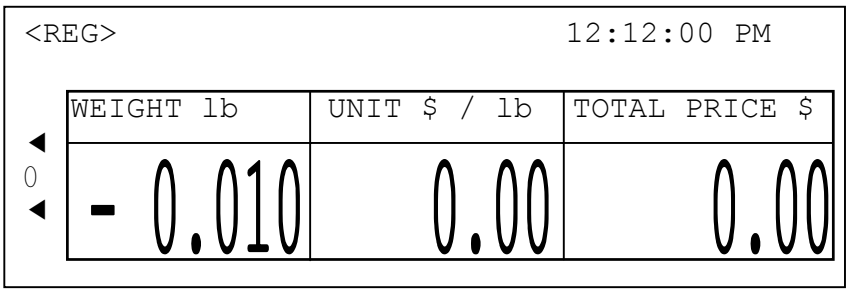

7.2.3 lb/kg Key

From the REG mode screen, you can switch between lb weighing and kg weighing. As long as the Total Price is 0.00 and there are no PLUs called-up, you may press the **lb/kg** key to switch between lb and kg. Below are samples of the same screen shown in lb and kg. Remember, the **lb/kg** key only applies to By-Weight PLUs, Misc By-Weight, and Misc By-Count but has no effect on By-Count or Non-Food PLUs. This key makes only used of USA version. This key is out of use to the Others Version.

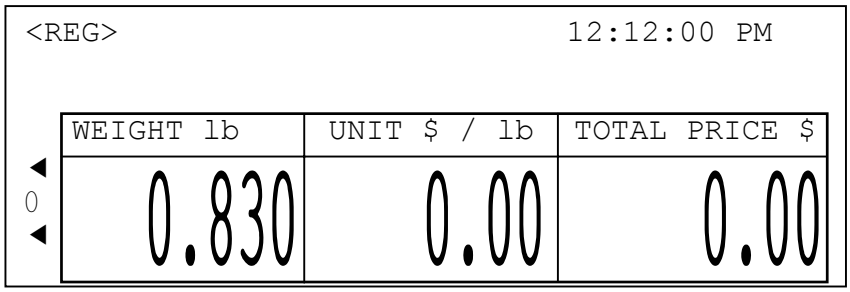

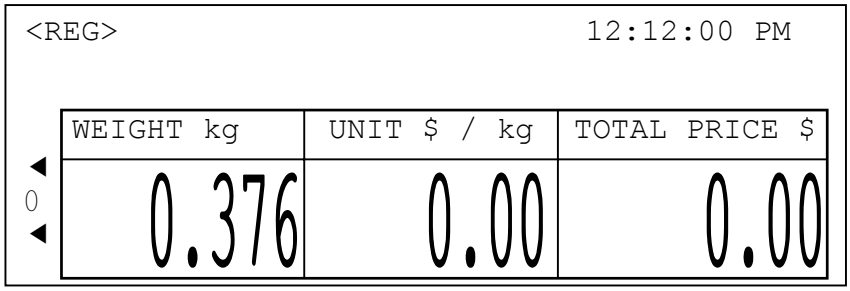

7.2.4 ON/OFF Key

From the REG mode screen, you can turn the scale's displays on or off by pressing the **ON/OFF** key. When you press the **ON/OFF** key to turn off the scale, it still has power and is fully operational except that the keyboard does not work and the displays are off. Turning the power OFF with the power switch located on the side of the scale is NOT the same thing as using the **ON/OFF** key. Turning the power switch OFF is equivalent to unplugging the scale from the electrical outlet. When you are using the LP-2 as a standalone scale, then you may turn the scale OFF using the power switch; however, if you are using an scale network then it is recommended never to turn the scales OFF with the power switch unless the network is not in use.

Whenever you have a scale network and you need to turn the scale off, you can use the **ON/OFF** key. When you use the **ON/OFF** key to turn the displays off, you can tell that it is still operational by pressing any key while the displays are off. When you do this you can hear them beep even though the displays are off. If you use the power switch to turn the scale OFF then pressing any key will not produce any beeping.

WARNING! Never attempt to service the scale while the power switch is ON. Unplug the scale before attempting any kinds of repairs. If you need to remove any labels that may have become glued to the thermal print head, make sure you unplug the scale first. Remember, in order to effect repairs on any scale, you must be licensed by your Department of Weights and Measures.

7.2.5 PLU/SHIFT Key and Speed keys

From the REG mode screen, you can call-up PLUs by typing the PLU number and then pressing the **PLU/SHIFT** key. You can also call-up PLUs by pressing that PLU's Speed key, or pressing the **PLU/SHIFT** key and then that PLU's Speed key.

PLU number + PLU/SHIFT: To call-up PLU number 410023 you need to press the following keys : **4**, **1**, **0**, **0**, **2**, **3**, and **PLU/SHIFT** key.

Speed key: To call-up PLU number 79, and you programmed Speed key #5 to be PLU number 79, then you need to press the following key: Speed key #5.

Speed key, shifted: To call-up PLU number 412290, and you programmed Speed key #100 to be PLU number 412290, then you need to press the following keys: **PLU/SHIFT** and Speed key #44.

The Speed keys are numbered left-to-right and top-to-bottom. There are 8 columns and 7 rows for a total of 56 physical keys but if you press the **PLU/SHIFT** key and then one of the 56 Speed keys, then you can access Speed keys 57 through 112. If you use the 3 MISC PLU keys, then you loose Speed keys 54, 55, and 56 as well as their shifted Speed keys (110, 111, and 112). That is why when you use the 3 MISC PLU keys, then your Speed keys are numbered 1 to 53 and 57 to 109.

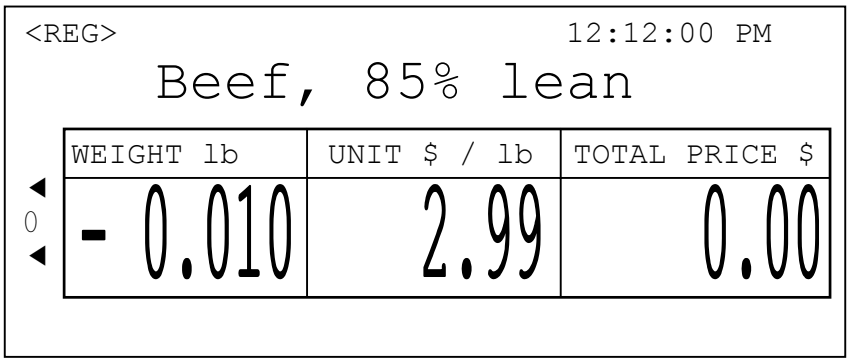

Pressing Speed key 1.

Calling-up By-Weight PLUs that are programmed as kg while the scale is in lb mode will work automatically display the PLU that you called-up. At that time, weighting mode is changed to kg mode, vice versa.

7.2.6 MISC PLU keys

From the REG mode screen, you can call-up any of the 3 MISC PLUs by pressing the corresponding **MISC PLU** key. Even if you have never programmed ANY PLUs into your scale, you can always use any of the **MISC PLU** keys. The 3 **MISC PLU** keys correspond to the 3 PLU types: By-Weight, By-Count, and Non-Food. The By-Weight and By-Count PLUs should be used for food items as these PLUs can contain all required information for food packaging. Non-Food PLUs do not have all of the required data necessary to label food products. Remember, even though By-Weight and By-Count PLUs can contain all required information for food packaging, the Label Format assigned to these PLUs needs to contain those required fields in order to print them. If you use the formats recommended for each PLU type, you can never go wrong.

```
<REG>                          RIDE 12:12:00 PM
  Misc By Weight PLU
  WEIGHT   lb   | UNIT $ / lb  | TOTAL PRICE $
◄                |              |
0      0.000     |     0.00     |      0.00
```

Pressing **MISC By-Weight PLU** key.

```
<REG>                          RIDE1 12:12:00 PM
  Misc By Count PLU
  QTY  | PCS/$PRICE ( 33 oz) | TOTAL PRICE $
◄      |                     |
0  1   |        1/0.00       |      0.00
```

Pressing **MISC By-Count PLU** key.

```
<REG>                          RIDE 12:12:00 PM
  Misc Non-Food PLU
                 |            | PRICE        $
◄                |            |
0                |            |      0.00
```

Pressing **MISC By-Weight PLU** key.

By-Weight: After pressing the **MISC By-Weight PLU** key, you need to enter the price and place the item on the scale.

By-Count: You need to enter the Net-Weight Statement amount (in ounces for lb mode, grams for kg mode), then press the **MISC By-Count PLU** key, and then enter the price using the **FOR** key. See section **7.2.7 FOR key** for details on using the **FOR** key.

Non-Food: Press the **MISC Non-Food PLU** key, and then enter the price.

7.2.7 FOR key

The **FOR** key is strictly used only for By-Count PLU pricing. Pressing the **FOR** key toggles between the QTY field, PIECES field, PRICE field, and back to the QTY field. Remember that the toggle wraps around so that the sequence is repeated indefinitely. Therefore, you can always return to the QTY field, PIECES field, or PRICE field.

```
<REG>                          RIDE1 12:12:00 PM
  Misc By Count PLU
  | QTY | PCS/$PRICE ( 33 oz) | TOTAL PRICE $ |
◄ |  1  |          1/0.00    |       0.00    |
0
```

Pressing any numeric key at this point will change the QTY field (the shaded region).

```
<REG>                          RIDE2 12:12:00 PM
  Misc By Count PLU
  | QTY | PCS/$PRICE (33 oz)  | TOTAL PRICE $ |
◄ |  1  |          1/0.00    |       0.00    |
0
```

Pressing the **FOR** key and then pressing any numeric key at this point will change the PIECES field (the shaded region).

```
<REG>                          RIDE3 12:12:00 PM
  Misc By Count PLU
  | QTY | PCS/$PRICE (  33 oz) | TOTAL PRICE $ |
◄ |  1  |          1/0.00    |       0.00    |
0
```

Pressing the **FOR** key and then pressing any numeric key at this point will change the PRICE field (the shaded region).

A By-Count price of QTY=2, PIECES=4, and PRICE=1.00 is read as **2 at 4 FOR $1.00**. It yields a Total Price of $0.50. You can calculate all By-Count prices as **(QTY÷PIECES) × PRICE = TOTAL PRICE**.
NOTE: Shading is not done by the scale display. This is done in the manual for clarity.

7.2.8 1/2, 1/4, and 100 g keys

If you assign country the USA, these keys are used for fractional pricing conversion for By-Weight PLUs only. If you assign country default, you can't use these keys. The **1/2** and **1/4** keys only work in lb weighing mode. The **100 g** key works only in kg weighing mode. When pressed, the **1/2** key simply multiplies the current Unit Price by 2. The **1/4** key multiplies the Unit Price by 4. The **100 g** key multiplies the Unit Price by 10. Once you press the **1/2**, **1/4**, or **100 g** key, you cannot press the **1/2**, **1/4**, or **100 g** keys again until the current PLU is cleared from the screen. This key makes only used of USA version. This key is out of use to the Others Version.

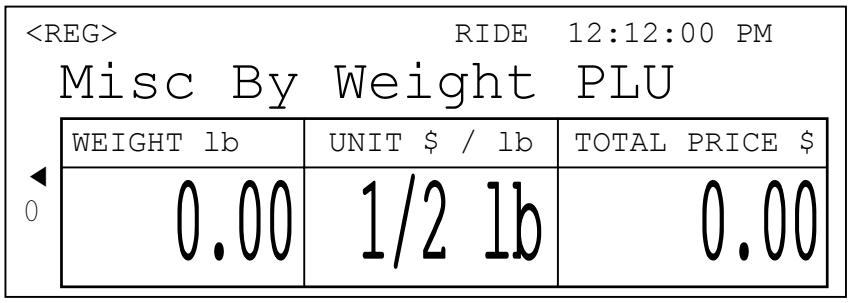

Pressing the **1/2** key temporarily displays the following before it multiplies the Unit Price by 2.

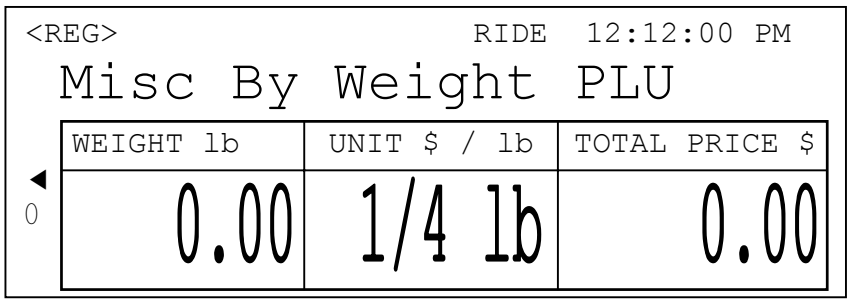

Pressing the **1/4** key temporarily displays the following before it multiplies the Unit Price by 4.

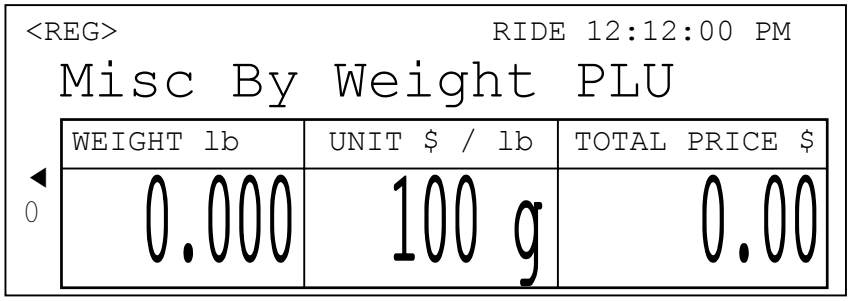

Pressing the **100 g** key temporarily displays the following before it multiplies the Unit Price by 10.

Note: Some States do not allow fractional pricing or the use of **1/2** or **1/4** keys. These keys maybe disabled and pressing them will yield a **Key not enabled** error message on the screen. If you wish to enable the use of these keys, please contact your Authorized CAS Dealer as only a state-licensed individual may change this feature on a scale.

7.2.9 Clear key

The **C** key is used to clear erroneous entries and to clear PLUs that have been called-up. If you press the **MISC By-Weight PLU** key, enter a price, and then press the **C** key only the Unit Price that you entered will be cleared to 0.00. If you press the **C** key when the Unit Price is 0.00, then the PLU will be cleared from the screen.

7.2.10 ADD, VOID, and ST/TTL keys

The **ADD** and **ST/TL** keys are used for conducting Cash Register-like transactions. If you press the **ADD** key instead of the **PRINT** key, you will initiate the ADD-UP process. In ADD-UP mode the scale prints every time you press the **ADD** key to make a sale transaction. The scale also keeps tract of how many items were added and the running total that it continuously displays. You can ADD-UP 20 items maximum. You can press the **VOID** key to undo the last transaction. Once you have added all of the items for that customer, you can press the **ST/TTL** key to print the grand-total. ADD-UP does not wok in Pre-Pack or Auto-Print modes. This function is out of use to Floating clerk mode 1, 2 (Floating clerk, Standard clerk mode).

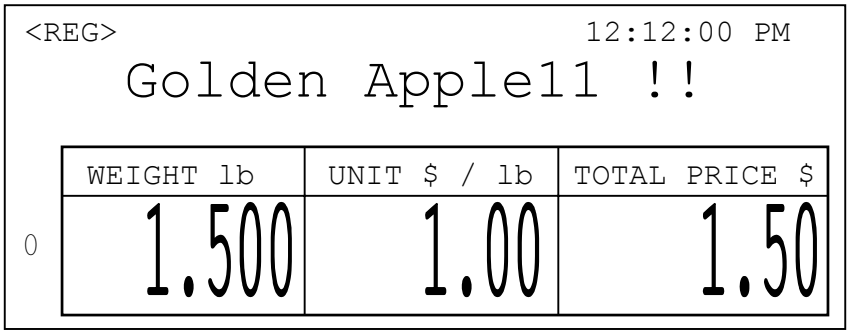

Call up a PLU.

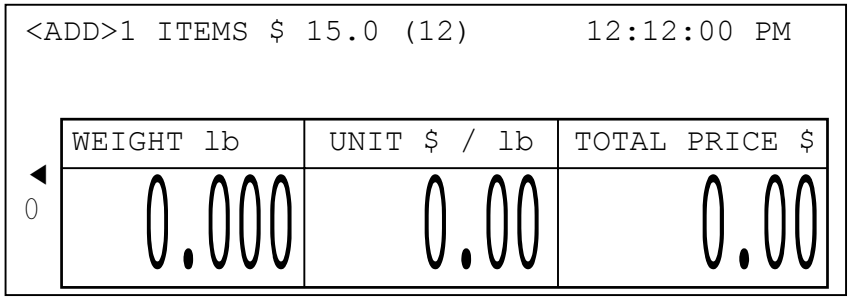

Press the **ADD** key. A label will be printed for that PLU and the PLU will auto-clear normally unless the SAVE mode is active.

You can repeat the ADD-UP process up to 19 more times for a total of 20 items or you can press the **ST/TL** key at anytime to get the grand-total label and complete the sale. The grand-total label gives you the Packed-On date, Total Weight, Total Tare Weight, Average Unit Price, Total Number of Items, and the Grand-Total price.

This is not a receipt-mode transaction or a floating clerk transaction.

7.2.11 SAVE key

By-Weight PLUs auto-clear if the weight goes over zero and stabilizes, and then returns to zero and stabilizes. By-Count and Non-Food PLUs auto-clear whenever you press the **ADD** or **PRINT** key. However, if the scale is in SAVE or Pre-Pack mode, then the PLU will not auto-clear. Thus the **SAVE** key is used to prevent the auto clearing of PLU data. You cannot select SAVE mode if the scale is in Pre-Pack mode. You exit SAVE mode by also pressing the **SAVE** key. Once you exit SAVE mode, the scale will auto-clear.

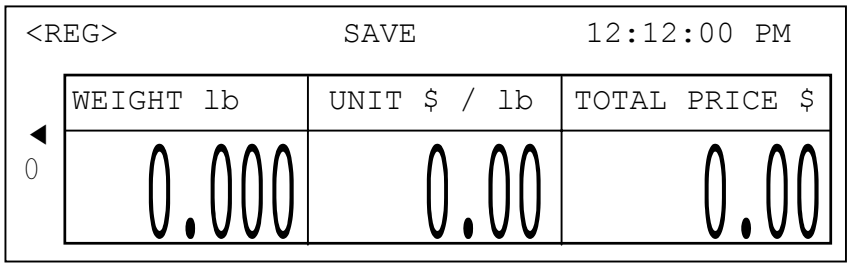

Press the **SAVE** key.

7.2.12 AUTO/MANUAL key

When the scale is in AUTO mode, it prints labels automatically. When it is in MANUAL mode, you must press the **PRINT** key (or **ADD** key) to get a label. ADD-UP mode never auto-prints regardless of what mode (AUTO or MANUAL) the scale is in. Also, if the scale is in Pre-Pack mode, you cannot select AUTO mode. You can use AUTO mode and SAVE mode to do pre-packaging but the weight must return to zero for every auto-print. This key is out of use to floating clerk mode.(Floating clerk, Standard clerk mode)

Auto-print: If the scale is in AUTO mode then it will auto-print the first time if the Total Price is greater than 0.00 and:

1. the weight goes over zero and stabilizes

Auto-print: If the scale is in AUTO mode and SAVE mode then it will auto-print after the first time if the Total Price is greater than 0.00 and both the following conditions are met:

1. the weight goes to zero and stabilizes.
2. the weight goes over zero and stabilizes

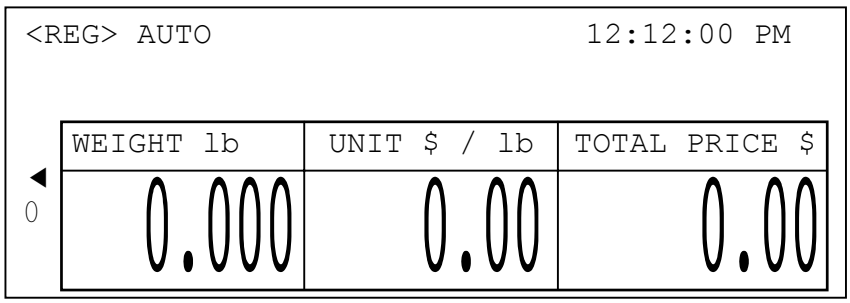

Press the **AUTO** key.

7.2.13 PRE-PACK key

When the scale is in Pre-Pack mode, it prints labels automatically. When it is in MANUAL mode, you must press the **PRINT** key (or **ADD** key) to get a label. In Pre-Pack mode, you cannot select AUTO mode. Pre-Pack works like AUTO and SAVE mode except that the weight does not need to return to zero for every auto-print. This key is out of use to Floating clerk mode 1, 2.(floating clerk, Standard clerk mode)

Auto-print: If the scale is in Prepack mode then it will always auto-print if the Total price is greater than 0.00 and:

1. the weight deviates by an amount greater than or equal to the Motion Band setting and the weight stabilizes at a weight greater than zero.

```
<REG>            PrePack       12:12:00 PM

 ◄ | WEIGHT lb | UNIT $ / lb | TOTAL PRICE $ |
 0 |   0.000  |    0.00     |      0.00     |
```

Press the **PRE-PACK** key.

Pre-pack mode is very useful in back-room applications. This mode increases productivity by not requiring the user to press the **PRINT** key for every package. Instead the user can concentrate on weighing, wrapping, and labeling.

Note: The **Motion Band Setting** controls some weighing aspects of the LP-2 and thus requires you contact your Authorized CAS Dealer because only a state-licensed individual may change this feature on a scale. The **Motion Band Setting** is set to 1 by default. This means that the weight needs to change by ±1 external display division in order to auto-print.

7.2.14 X key

The **X** key is used to print multiple transactions for the same PLU. It only works for By-Count or Non-Food PLUs. You can specify to print up to 999 labels. The **X** key does not work with By-Weight PLUs or Pre-Pack mode. The **X** key operation is called the Multi-Label function.

```
ENTER NUMBER OF LABELS        12:12:00 PM
  Common Nails

 ◄ |          |          | PRICE      $ |
 0 |          |          |          3.59 |
```

Call-up a Non-Food PLU and then press the **X** key.

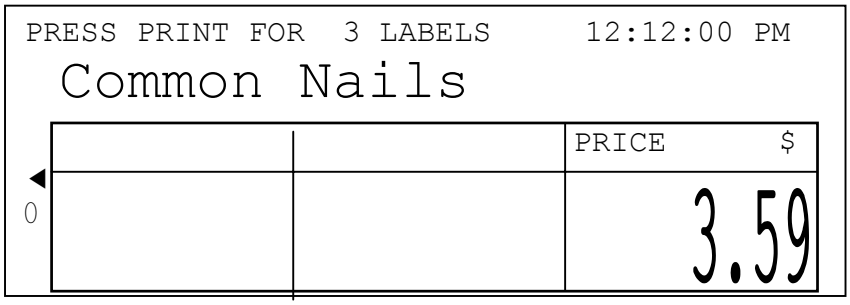

Type the number of labels you require and press the **PRINT** key.

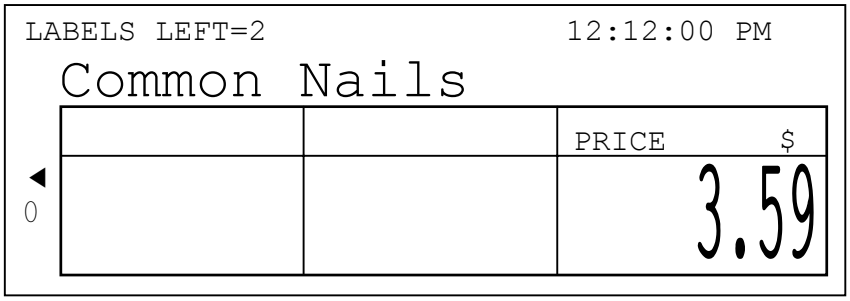

As the scale prints the labels it will count down the label counter.

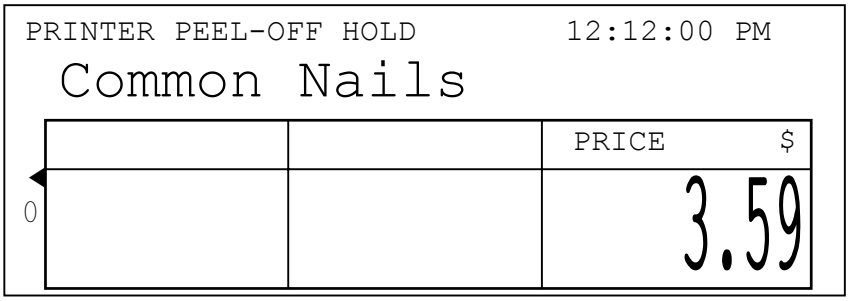

If you are in MANUAL mode and you take too long to pick-up the printed label from the printer, you will see the following message.
This message will go away as soon as you remove the printed label from the printer bay.

If you use the Multi-Label function (**X** key) while the scale is in AUTO mode, then the printer will print all of the labels that you specified and it will not pause between labels. Also, the pick-up motor and spool will not run so that you can have the labels remain on the liner backing-paper so that you can place them on the appropriate items at another time. In this case you will never see the **Printer Peel-Off Hold** error message. When you want to stop label printing, press C(clear) key. Label printing will be stoped.

Once the scale is done printing the labels in the Multi-Label/AUTO mode, the scale will prompt you **Press any key to pick-up slack**. At this point, you can either remove all the printed labels from the liner backing-paper and press any key, or you can cut-off the printed labels with their liner backing-paper, rethread the liner backing-paper through the printer assembly attaching it to the pick-up spool, and then press any key.

7.2.15 RETURN key

The **RETURN** key is used to delete erroneous sale transactions. This key requires that you be MGR mode in order to use it. You can use the **RETURN** key to undo erroneous sales transactions like pressing the **PRINT** key inadvertently, selecting and printing the wrong PLU, an inadvertent Auto-Print in Pre-Pack mode, or perhaps adjusting the sales totals for a damaged or ruined package. Whatever the reason,

the **RETURN** function will decrement returned PLU's transaction counter and sales totals by the specified amount. A return transaction also increments the Return-transaction counter and the Return-Sales Total. A return transaction does not print any labels.

First, make sure that you are in MGR mode. Press the **RETURN** key and the display will show:

```
RETURN PLU:     0                12:12:00 PM
```

WEIGHT lb	UNIT $ / lb	TOTAL PRICE $
0.000	0.00	0.00

At this point, you need to call-up the PLU that you wish to return by either pressing its corresponding speed key or typing its number.

Once you select the returned PLU, the display will change to:

```
ENTER TOTAL PRICE, THEN PRESS RETURN
  Golden Delicious Apple
```

WEIGHT lb	UNIT $ / lb	TOTAL PRICE $
0.000	1.00	0.00

At this point, you need to enter the total price that was printed on the return PLU's label and then press the **RETURN** key.

Once you enter the total price, the display will change to:

```
PRICE TO BE RETURNED= $  1.10
  Golden Delicious Apple
```

WEIGHT lb	UNIT $ / lb	TOTAL PRICE $
0.000	1.00	0.00

After you enter the return amount, press the **RETURN** key. The scale will temporarily display the returned amount and then auto-clear the display.

7.2.16 OVERRIDE key

The **OVERRIDE** key is used to temporarily change the pricing of ***priced PLUs***. That is, PLUs programmed with a zero price, can have their prices temporarily changed without the use of the **OVERRIDE** key.

Call-up the PLU you wish to use. Once it comes up on the screen, press the **OVERRIDE** key. If you are in REG mode the scale will prompt you for a level 2 password; MGR mode will not display a password entry screen. If you are in REG mode, enter the password and then press the **PRINT** key. At this point the PLU's price will be set to 0.00 and you may enter the temporary price that you wish to use. At any point, you may press the **OVERRIDE** key to revert to the PLU's pre-programmed price.

Whenever you are using an override price the display will show the override status to the left of the time/date display.

```
<REG>                          Ride 12:14:19 PM
 Delicious Golden Apple
 | WEIGHT lb | UNIT $ /lb | TOTAL PRICE $ |
◀| 0.000     | 0.99      | 0.00          |
0
```

The **Ride** message on the upper right side of the display indicates that you are using an override price.

7.2.17 DEPT key

The **DEPT** key is used to temporarily change the department assignment of the scale. That is, if a scale is assigned to department 1 then all of the PLUs that you select on that scale will be from department 1; however, if you want to select a PLU from another department, then you can use the **DEPT** key.

Press the **DEPT** key. If you are in REG mode the scale will prompt you for a level 2 password; MGR mode will not display a password entry screen. If you are in REG mode, enter the password and then press the **PRINT** key. The Change Department screen will appear.

```
            < CHANGE DEPARTMENT >

Old Department:  1
Bakery Department

New Department:[ 2]
```

The **New Department** entry field will default to have the same number as the Old Department field. The Old Department field indicates the scale's assigned department; the New Department field allows you enter the temporary department you wish to change to. Press the **PRINT** key after you select the temporary department.

The display will return to the sales mode screen. The time/date field will show ◀**DEPT#: 2** where the asterisks indicate that you are in a temporary department assignment state. You can press the **DEPT** key to cancel the temporary department assignment or proceed with a transaction. After a transaction, the scale will revert to its programmed department assignment.

7.2.18 Temporary Date Change

The **DATE/TIME** key can be used to temporarily change the current date (Packed On date). To activate this feature, make sure that you are in REG, MGR or RPK mode. Press the **ALT** key and then the **DATE/TIME** key. The display will change to the following:

```
< SET: SET TEMPORARY DATE >

       Year: [1999]
       Month:  [10]
       Day:    [ 2]
```

From here you can enter the temporary date settings that you wish to use. Press the **PRINT** key after entering the appropriate data in each field. The screen will return to sales mode once you are done.

Once the screen returns to the sales mode, it will display the temporary date as follows: ◀**10-02-1999**. The arrowhead (◀) indicate that you are in a temporary date change state. While the scale is in temporary date change mode if you press the **ALT** key followed by the **DATE/TIME** key it will cancel the temporary date change.

7.2.19 Temporary Date Print Inhibit

The **ON/OFF** key can be used to temporarily inhibit the printing of dates. To activate this feature, make sure that you are in REG, MGR or RPK mode. Press the **ALT** key and then the **ON/OFF** key. The display will change to the following:

```
                                INS/CAPS
     < Temporary Date Print Inhibit >

DATE1: PACKED ON (Y/N) :[N]
DATE2: SELL BY   (Y/N) :[N]
DATE3: Cook By   (Y/N) :[N]
```

From here you can enter the temporary date print inhibit that you wish to use. Press the **PRINT** key after entering the appropriate data in each field. The screen will return to sales mode once you are done.

Once the screen returns to the sales mode, it will display as follows: **DATE INHIBIT**. While the scale is in temporary date print inhibit mode, if you press the **ALT** key followed by the **ON/OFF** key it will cancel the temporary date print inhibit.

7.2.20 Temporary PLU Data Change

The **PLU/SHIFT** key can be used to temporarily change certain PLU data. To activate this feature, make sure that you are in REG, MGR or RPK mode. Press the **ALT** key and then the **PLU/SHIFT** key. The display will change to the following:

```
                                INS/CAPS
       < Temporary PLU Data Change >

Sell By Date        : [ 10]Days
Cook By Date        : [  2]Days
Country of Origin   : [  0]Not assigned
Sales Message : [ 0] Message not Found
```

From here you can enter the temporary PLU data that you wish to use. Press the **PRINT** key after entering the appropriate data in each field. The screen will return to sales mode once you are done.

Once the screen returns to the sales mode, there is no way of knowing that the temporary PLU data is being used. Simply pressing Clear, loading another PLU, or terminating & auto-clearing after a transaction will clear the temporary PLU data.

7.3 MGR Mode

MGR mode (Manager mode) works very similarly to REG mode except that you need a level 2 password to access MGR mode. Any sales mode features requiring a password (i.e. return, temporary date change, etc) will not require a password while in MGR mode.

To access MGR mode, you can select option 2 from the Main Menu. The scale will prompt you for a level 2 password. Enter the password and press the **PRINT** key. You will be in the MGR mode screen.

```
<MGR>                           12:12:00 PM

 ◄ | WEIGHT   lb | UNIT $ / lb | TOTAL PRICE $ |
 0 |      0.000 |       0.00 |          0.00 |
```

7.4 RPK Mode

RPK mode (Re-Packaging mode) works very similarly to REG mode except that you need a level 2 password to access RPK mode and cannot use ADD key. RPK mode however, does **not record any sales transactions**. You can use this mode for training a clerk to use the LP-2, or to repackage/mark-down selected merchandise. You will not be able to distinguish labels printed in RPK mode from those printed in any other sales mode.

To access RPK mode, you can select option 3 from the Main Menu. The scale will prompt you for a level 2 password. Enter the password and press the **PRINT** key. You will be in the RPK mode screen.

```
<RPK>                                12:12:00 PM

  | WEIGHT  lb  | UNIT $ / lb | TOTAL PRICE $ |
◄ |     0.000   |      0.00   |        0.00   |
0
```

8 .X and Z Modes

8.1 Reading Sales Summaries: X mode

X mode is used to read (i.e. print and display) sales data. When sales data is displayed, only the user display will be on, that is, the customer side display will be off. There are a variety of reports that you can generate from X mode. Each of these reports is kept in two separate counters or "books" called X1 and X2. The X1 and X2 reports allow you to print reports at any time for either of the reporting periods. You can use X1 reports to see current daily totals and X2 reports to see current weekly totals. The time period combination you chose is completely dependent upon how you use Z1 and Z2.

There are 7 detailed reports and 1 summary report called the X Report for each of the periods X1 and X2. That's 8 reports per period. **Remember, on a network, only the master scale will have the sale data for ALL scale.** Also, remember that you can generate as many X reports as you would like because X mode does **NOT** clear any sales data.

To access X mode, you can select option 4 from the Main Menu. The scale will prompt you for a level 2 password. Enter the password and press the **PRINT** key. You will be at the X1: Read Totals screen. You can press **PAGE UP** and **PAGE DOWN** to change from X1 to X2 screens.

```
          < X1: READ TOTALS >
(1/2)     Periodic Totals #1
1.PLU Sales            5.Scale Sales
2.Misc. Sales          6.Hourly Sales
3.Group Sales          7.Clerk Sales
4.Department Sales     8.X1 Report
```

From here you can select the report that you wish to generate.

8.1.1 PLU Sales

From the X1 or X2 Read Totals screen you can press **1** to select the PLU Sales report. The X1: PLU Sales screen will be displayed.

```
Press SAVE to print report
            < X1: PLU SALES >
Department: [ 1]:     Bakery Department
PLU:    [     0]:     PLU not found
```

From here you can select the department number and PLU number of the PLU you wish to display the sales report of. You can also press the SAVE key to print the report.

Once you have selected a PLU and pressed **PRINT**, the display will show the sales data for that PLU. At that point you can select another department and/or PLU to see the sales data of. If you wish to print the sales report, make sure that there are sufficient labels/paper in the printer; however, if you run out of labels/paper during an X report, do not worry because you can re-generate that same X mode report as many times as you would like.

```
Press SAVE to print report
            < X1: PLU SALES >
Department: [ 1]:     Bakery Department
PLU:    [     1]:     Red Delicious Apples
Transactions:      3  Total $:        2.59
Total Weight:     0.000
Dept  1 Net $:      0.00        0.00%
Total Gross $:      0.00        0.00%
```

By-Weight PLU
From here you can select another department number and/or PLU number that you wish to display the sales report of. You can also press the SAVE key to print the report.
Total Weight is the total amount of weight sold under that PLU.

```
Press SAVE to print report
            < X1: PLU SALES >
Department: [ 1]:     Bakery Department
PLU:    [     2]:     Bread
Transactions:      3  Total $:        2.59
Total Pcs:        20
Dept  1 Net $:      0.00        0.00%
Total Gross $:      0.00        0.00%
```

By-Count PLU
Total Pcs is the total amount of pieces sold of a By-Count PLU.

Transactions is the number of sales generated by that PLU.

```
Press SAVE to print report
            < X1: PLU SALES >
Department: [ 4]:     Misc Department
PLU:    [     3]:     Nails
Transactions:      3  Total $:        2.59

Dept  1 Net $:      0.00        0.00%
Total Gross $:      0.00        0.00%
```

Non-Food PLU
Group gives the total sales for the group that this PLU belongs to and the percentage of that group's sale that this PLU sold.

Dept gives the total sales for the PLU's dept and the percentage sales that this PLU composes of relative to its dept.

Here is a sample report for PLU sales. The report contains the same details as the screen does but it includes ALL PLUs at the scale. Remember that only those PLUs that generated sales will be included in this report excluding Misc PLUs which are reported through the Misc PLU Sales report.

The X2, Z1, and Z2 PLU sales reports look the same as this one. Depending on the width of the labels/paper that you are using, you may get things printing in different positions than indicated. Also, if you are using labels of fixed size, you may require several labels to print an entire report.

We recommend the use of thermal paper to print reports. This makes the reports print on one strip of paper and because you are not using labels, you need not worry about the report sticking to itself or other objects. However, this requires the

```
X1 PLU SALES- SCALE 1
APR 2 1999 12:10:46 PM
Dept  1 PLU: 1
Transactions: 3
Total $: 16.78
Total Weight:   1.416 kg
% Dept Net :     10.0%
% Tot Gross:     20.0%
Dept  1 PLU: 2
Transaction: 7
Total $: 26.78
Total Pcs:      26
% Dept Net :     10.0%
% Tot Gross:     20.0%

Dept  32 PLU: 99999
Transaction: 10
Total $: 36.78

% Dept Net :     10.0%
% Tot Gross:     20.0%
```

insertion and removal of the paper media each time you do reports.On a network, the master scale has the PLU sales report data for all scales.

8.1.2 MISC PLU Sales

From the X1 or X2 Read Totals screen you can press **2** to select the Misc PLU Sales report. The X1: Misc PLU Sales screen will be displayed. The Misc PLU Sales report works exactly the same as the PLU Sale report except that you can only get the sales data for the 3 miscellaneous PLUs. On a network, the master scale has the Misc PLU sales report data for all scales.

8.1.3 Group Sales

From the X1 or X2 Read Totals screen you can press **3** to select the Group Sales report. The X1: Group Sales screen will be displayed.(Group 0

```
Press SAVE to print report
            < X1: GROUP SALES >
Group: [ 1]
```

From here you can select the group number of the group you wish to display the sales report of. You can also press the SAVE key to print the report.

Once you have selected a group and pressed **PRINT**, the display will show the sales data for that group. At that point you can select another group that you wish to see the sales data of. If you wish to print the sales report, press the **SAVE** key.

```
Press SAVE to print report
            < X1: GROUP SALES >
Group: [ 1]

Transactions:        0  Total $:        0.00
All Groups     Total $:       0.00      0.0%
```

Transactions is the total number of sales transactions and the total sales for the entire group.

All Groups is the total number of sales transactions for all groups and the percentage sales that this group composes relative to all groups.

Here is a sample report for Group sales. The report contains the same details as the screen does but it includes ALL Groups. Only those groups that generated sales will be included in this report excluding Misc PLUs which are reported through the Misc PLU Sales report.

The X2, Z1, and Z2 Group sales reports look the same as this one. Depending on the width of the labels/paper that you are using, you may get things printing in different positions than indicated.

```
X1 GROUP SALES- SCALE 1
APR 2 1999 12:10:46 PM
Group  0
Transactions: 3
Total $: 16.78
% All Groups:     20.0%
Group  2
Transaction: 3
Total $: 16.78
% All Groups:     20.0%

Group  99
Transaction: 3
Total $: 16.78
% All Groups:     20.0%
```

Also, if you are using labels of fixed size, you may require several labels to print an entire report.

On a network, the master scale has the Group sales report data for all scales.

8.1.4 Department Sales

From the X1 or X2 Read Totals screen you can press **4** to select the Department Sales report. The X1: Dept Sales screen will be displayed.

```
Press SAVE to print report
            < X1: DEPT SALES >
Department: [ 1]:
```

From here you can select the department number of the department you wish to display the sales report of. You can also press the SAVE key to print the report.

Once you have selected a department and pressed **PRINT**, the display will show the sales data for that department. At that point you can select another group that you wish to see the sales data of. If you wish to print the sales report, press the **SAVE** key.

```
Press SAVE to print report
            < X1: DEPT SALES >
Department: [ 1]: Bakery Department

Transactions:      83  Total $:      99.00
All Depts     Total $:     20.00    15.3%
```

Transactions is the total number of sales transactions and the total sales for the entire department.

All Depts is the total number of sales transactions for all departments and the percentage sales that this department composes relative to all departments.

The Department Sales report is very similar to the Group Sales report and the printed report is practically identical. On a network, the master scale has the Department sales report data for all scales. The X2, Z1, and Z2 Department sales reports look the same as the X1 report.

8.1.5 Scale Sales

From the X1 or X2 Read Totals screen you can press **5** to select the Scale Sales report. The X1: Scale Sales screen will be displayed. You can proceed through this sales report as with Department sales and Group sales, which are both practically identical in displayed and printed sales formats. On a network, the master scale **does not** have the Scale sales report data for all scales; you must acquire the Scale sales report at each individual scale. For all other sales reports, the master does have the sales data from all scale on a network. The X2, Z1, and Z2 Scale sales reports look the same as the X1 report.

8.1.6 Hourly Sales

From the X1 or X2 Read Totals screen you can press **6** to select the Hourly Sales report. The X1: Hourly Sales screen will be displayed. This screen lists all 24 hours of the day along with pertinent sales data for those hours. Once at the Hourly Sales screen, you can press the ▼ ,▲ , **PAGE UP,** and **PAGE DOWN** keys to navigate through the 5 pages of hourly sales data.

```
            < X1: HOURLY SALES >
Hour   Transactions     Total $    % Daily
12AM              0        0.00       0.0%
 1AM              0        0.00       0.0%
 2AM              0        0.00       0.0%
 3AM              0        0.00       0.0%
 4AM              1        1.00    0.5061%
```

If you wish to print the sales report, you can press the **SAVE** key while on any of the 5 pages.

Here is a sample report for Hourly sales. The report contains the same details as the screen does.

The X2, Z1, and Z2 Hourly sales reports look the same as this one. Depending on the width of the labels/paper that you are using, you may get things printing in different positions than indicated. Also, if you are using labels of fixed size, you will require several labels to print an entire report.

On a network, the master scale has the Hourly sales report data for all scales.

```
X1 HOURLY SALES- SCALE 1
APR 2 1999 12:10:46 PM
Hour: 12AM
Transaction: 0
Total $:  0.00
% Total:    0.0%
Hour:  1AM
Transaction: 0
Total $:  0.00
% Total:    0.0%

Hour: 11PM
Transaction: 2
Total $:  1.00
% Total:    8.3%
```

8.1.7 Clerk Sales

From the X1 or X2 Read Totals screen you can press **7** to select the Clerk Sales report. The X1: Clerk Sales screen will be displayed. You can proceed through this sales report as with Department sales and Group sales, which are both practically identical in displayed and printed sales formats. On a network, the master scale has the Clerk sales report data for all scales. The X2, Z1, and Z2 Scale sales reports look the same as the X1 report. **This report is only for scales used in Floating Clerk mode.** Clerk 0 is the no-floating sale value.

8.1.8 Summary Report

From the X1 or X2 Read Totals screen you can press **8** to select the X1 or X2 Summary Sales report. Once you press the **8** key the report will begin to print. This report contains summarized and detailed information on specific sales functions. On a network, the master scale has the Summary Sale report data for all scales. The X2, Z1, and Z2 Summary Sales reports look the same as the X1 report.

This reports tells you:

- Number of Voids
- Number of Returns
- Number of Re-Packs
- Voided totals
- Returned total
- Re-Packed total
- Number of Price Changes
- Tax collected for all 3 rates
- Gross Total
- Number of Z1 or Z2 resets
- Last time and date of Z1 or Z2 report
- Non Resetting Grand Total

Here is a sample of the X1Summary Report.

```
X1 X-REPORT- SCALE 1
APR 2 1999 12:10:46 PM
Voids:  2
Void $: 2.00
Returns:  1
Return $: 1.00
Repacks:  2
Repack $:  1.99
Price Changes: 10
Tax1 $:  0.00
Tax2 $:  0.00
Tax3 $:  0.00
Gross $:  114.00
NRCN1:  1
Last Reset: 3-12-99 12:21:00 PM
NRGT $:  114.73
```

The X2, Z1, and Z2 Summary sales reports look the same as this one. Depending on the width of the labels/paper that you are using, you may get things printing in different positions than indicated. Also, if you are using labels of fixed size, you may require several labels to print an entire report.

On a network, the master scale has the Summary Sales report data for all scales.

8.2 Resetting Sales Summaries: Z mode

Z mode is used to read (i.e. print and display) and reset sales data. When sales data is displayed, only the user display will be on, that is, the customer side display will be off. There are a variety of reports that you can generate from Z mode. Each of these reports is kept in two separate counters or "books" called Z1 and Z2. These allow you to have two reporting periods that you can tailor to your needs. For example, you can use Z1 reports daily and Z2 reports weekly; you can use a hourly/daily combination; or any combination of time periods you prefer.

There are 7 detailed reports and 1 summary report called the Z Report for each of the periods Z1 and Z2. That's 8 reports per period. **Remember, on a network, only the master scale will have the sale data for ALL scale.**

To access Z mode, you can select option 6 from the Main Menu. The scale will prompt you for a level 3 password. Enter the password and press the **PRINT** key. You will be at the Z1: Read/Reset Totals screen. You can press **PAGE UP** and **PAGE DOWN** to change from Z1 to Z2 screens.

```
        < Z1: READ/RESET TOTALS >
(1/2)   Periodic Totals #1
1.PLU Sales             6.Hourly Sales
2.Misc. Sales           7.Clerk Sales
3.Group Sales           8.Z1 Report
4.Department Sales      9.Reset Counters
5.Scale Sales
```

From here you can select the report that you wish to generate.

8 .X and Z Modes

If you generate a Z1 PLU Sales report, then any X1or Z1 PLU Sales reports that you generate immediately after (barring any sales) will give zero sales data for those reports. This is also true for Z2. **However, the Z1 and Z2 Summary reports also clear out the data for ALL other reports (options 1 to 7)!** If you generate a Z1 Summary report, then any X1or Z1 sales reports that you generate immediately after (barring any sales) will give zero sales data for those reports. Z Summary reports clear the following: PLU Sales report, Misc. Sales report, Group Sales report, Department Sales report, Scale Sales report, Hourly Sales report, and Clerk Sales report. **If you also wish to generate reports other than Z Summary reports, then generate those reports before generating the Z Summary report.**
All screens and functions for Z1 and Z2 are very similar and both are the same as their X1 and X2 counterparts. The instructions for X1 mode are sufficient for X2, Z1, and Z2. The only difference in generating reports between Z mode and X mode is that after a report prints in Z mode the scale prompts you **Clear Report Data? (Y/N)**. If you select yes, then the screen returns to the previous menu and the sales totals for which you generated the report are then cleared. If you select no, then the sales totals for which you generated the report are **NOT** cleared.
And z Report has function of daily report and weekly or monthly report, if you clear report data every day by using **Z1** report and you clear report data every month by using **Z2** report, you will be received **daily** report and **monthly** report. Because, even though you clear z1 report, Z2 report has the items of an account still.

```
(1/2)      < Z1: READ/RESET TOTALS >

1.PLU Sales              6.Hourly Sales
2.Misc. Sales            7.Clerk Sales
3.Group Sales            8.Z1 Report
4.Department Sales       9.Reset Counters
5.Scale Sales
```

If you press the **8** key, the scale will print the Z1 Summary report and then prompt you with the following screen.

```
Did the Report Print OK? (Y/N)
```

If you select yes, then the screen returns to the previous menu and the sales totals for which you generated the report are then cleared.

This "Print check" feature can be incredibly useful. For example, if the scale runs out of labels or paper while the report is printing and you loose some data, you select NO for the "Print check" screen.

Appendix A: Country Codes

#	Country	#	Country	#	Country
1		61	Denmark	121	
2		62	Djibouti	122	
3		63	Dominica	123	
4		64	Dominican Republic	124	
5		65		125	Laos
6		66		126	Latvia
7		67	Ecuador	127	Lebanon
8		68	Egypt	128	Lesotho
9		69	El Salvador	129	Liberia
10	Afghanistan	70	Equatorial Guinea	130	Libya
11	Algeria	71	Eritrea	131	Liechtenstein
12	Andorra	72	Estonia	132	Lithuania
13	Angola	73	Ethiopia	133	Luxembourg
14	Antarctica	74	Ecuador	134	
15	Antigua & Barbuda	75		135	
16	Argentina	76		136	Macedonia
17	Armenia	77	Fiji	137	Madagascar
18	Australia	78	Finland	138	Malawi
19	Austria	79	France	139	Malaysia
20	Azerbaijan	80		140	Maldives
21		81		141	Mali
22		82	Gabon	142	Malta
23	Bahamas	83	Gambia	143	
24	Bahrain	84	Georgia	144	
25	Bangladesh	85	Germany	145	Marshall Islands
26	Barbados	86	Ghana	146	Mauritania
27	Belarus	87	Greece	147	Mauritius
28	Belgium	88	Grenada	148	Mexico
29	Belize	89	Guatemala	149	Micronesia
30	Benin	90	Guinea	150	Moldova
31	Bhutan	91	Guinea-Bissau	151	Monaco
32	Bolivia	92	Guyana	152	Mongolia
33	Bosnia & Herzegovina	93		153	Morocco
34	Botswana	94		154	Mozambique
35	Brazil	95	Haiti	155	
36	Brunei	96	Honduras	156	
37	Bulgaria	97	Hungary	157	Namibia
38	Burkina Faso	98		158	Nauru
39	Burma/Myanmar	99		159	Nepal
40		100	Iceland	160	Netherlands
41		101	India	161	New Zealand
42	Cambodia	102	Indonesia	162	Nicaragua
43	Cameroon	103	Iran	163	Niger
44	Canada	104	Iraq	164	Nigeria
45	Cape Verde	105	Ireland	165	Norway
46	Central African Republic	106	Israel	166	
47	Chad	107	Italy	167	
48	Chile	108		168	Oman
49	China	109		169	
50	Colombia	110	Jamaica	170	
51	Comoros	111	Japan	171	Pakistan
52	Congo	112	Jordan	172	Palau
53	Congo, Democratic Rep. of	113		173	Panama
54	Costa Rica	114		174	Papua New
55	Cote d'Ivoire	115	Kazakstan	175	Paraguay
56	Croatia	116	Kenya	176	Peru
57	Cuba	117	Kiribati	177	Philippines
58	Cyprus	118	Korea, North	178	Poland
59		119	Korea, South	179	Portugal
60		120	Kuwait	180	

Appendix A: Country Codes

#	Country	#	Country	#	Country
181		206	Sri Lanka	231	United Kingdom
182	Qatar	207	Sudan	232	United States
183		208	Suriname	233	
184		209	Swaziland	234	
185	Romania	210	Sweden	235	Uruguay
186	Russian Federation	211	Switzerland	236	Uzbekistan
187	Rwanda	212	Syria	237	
188		213		238	
189		214		239	Vanuatu
190	Saint Kitts	215	Taiwan	240	Vatican City
191	Saint Lucia	216	Tajikistan	241	Venezuela
192	Saint Vincent	217	Tanzania	242	Vietnam
193	San Marino	218	Thailand	243	
194	Sao Tome	219	Togo	244	
195	Saudi Arabia	220	Tonga	245	Western Samoa
196	Senegal	221	Trinidad and Tobago	246	
197	Seychelles	222	Tunisia	247	
198	Sierra Leone	223	Turkey	248	Yemen
199	Singapore	224	Turkmenistan	249	Yugoslavia
200	Slovakia	225	Tuvalu	250	
201	Slovenia	226		251	
202	Solomon Islands	227		252	Zambia
203	Somalia	228	Uganda	253	Zimbabwe
204	South Africa	229	Ukraine	254	
205	Spain	230	United Arab Emirates	255	
0	COUNTRY CODE NOT USED.				

Warrantee

Format numbers 1 to 99 are built into LP-2; however, only 56 of the 99 available label formats are used. These formats are a permanent part of the LP-2's memory and CANNOT be lost or erased. Using the SP-2 software package, you can program format numbers 100 to 999. Provided you have enough memory, you can download those formats from your PC to your LP-2.

In all of the listings below, the label format number that is in bold is the number that you input to your PLUs when you wish to use that label. The numbers prefixed with "**LST**" are Rittenhouse Inc. stock numbers. Dimensions are specified as **Width X Length**.

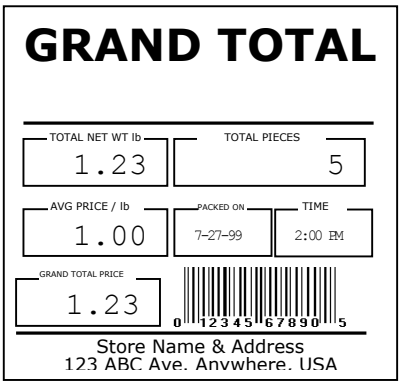

98: 50mm X 45mm
Add Up Total Format

99: 50mm X 45mm
Universal 50x45 Format

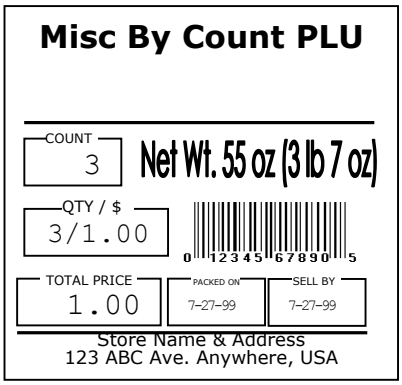

99: 50mm X 45mm
Universal 50x45 Format

99: 50mm X 45mm
Universal 50x45 Format

Warrantee

Number	Description	Scale Manufacturer	Stock #
1	58mm X 30mm Non-UPC	CAS	LST-8000
2	58mm X 40mm UPC	CAS	LST-8010
3	58mm X 60mm UPC Ingredients	CAS	LST-8020
4	58mm X 50mm Safe Handling Non-UPC	CAS	LST-8030
5	58mm X 60mm Safe Handling UPC	CAS	LST-8040
6	60mm X 79mm	DIGI	LST-1264
7	60mm X 43mm	DIGI	LST-6110
8	60mm X 50mm	DIGI	LST-6250
10	60mm X 40mm, UPC, Caption	CAS	CPT-6040
11	60mm X 40mm, UPC, Caption	CAS	CPT-6040
12	60mm X 60mm, UPC, Ingredients, Caption	CAS	CPT-6060
13	60mm X 40mm, UPC	CAS	LST-6040
14	60mm X 60mm, UPC, Ingredients	CAS	LST-6060
21	64mm X 58mm	ISHIDA	LST-4160
22	64mm X 48mm	ISHIDA	LST-4150
23	67mm X 37mm	Kubota	LST-3330
24	67mm X 48mm	Kubota	LST-3370
25	67mm X 48mm	Kubota	LST-3360
29	53mm X 52mm	Kubota	LST-3610
35	57mm X Continuous, UPC, Safe Handling, Ingredients	TEC	LST-5030
41	48mm X 40mm, UPC	TEC	LST-2530
43	48mm X 69.3mm UPC, 6 Line Ingredient	TEC	LST-2540
44	48mm X 54.8mm UPC, 6 Line Ingredient	TEC	LST-2730
51	57mm X 63.5mm, UPC, 6 Line Ingredients	TEC	LST-4910
52	64mm X 59mm	ISHIDA	LST-4160
53	40mm X 91mm	DIGI	LGT-6410
54	40mm X 62mm	DIGI	LGT-1211
55	57mm X 47mm	TEC	LST-4900
56	40mm X 45mm	DIGI	LST-60-N-R
89	46mm X 74mm		MERIDTH
96	Total 50mm X 45mm (format #98 180° rotate)		
97	57mm X 100mm, CAS DEFAULT LABEL	CAS	DEFAULT
98	50mm X 45mm Grand Total Format for ST/TL key (ADD mode.)	CAS	
99	50mm X 45mm Misc. Format	CAS	

There are many more formats that are the same or similar to the above, in which case the LP-2 is capable of using those labels. For a complete cross-reference and listing, visit us on the web at www.cas-usa.com. These formats are subject to change without notice. Type the format number into a Label Format field to determine if your scale has such a format.

How to Call up a PLU	To call up a PLU number 3: 1. Press the **3** key ➔ Press the **PLU** key. 2. Press the speed key #3. *** Speed Key, shifted** (#57~ #112) : Press the **PLU/SHIFT** key ➔ Speed key To call up a speed key #100: Press the **PLU/SHIFT** and Speed key #44.
By-Weight PLU	Call up a By-Weight PLU ➔Place an item on the platter ➔ Press the **PRINT** key
OVERRIDE key (By-Weight PLU)	Call up a By-Weight PLU ➔ Press the **OVERRIDE** key. ➔ Enter the password and then press the **PRINT** key ➔ enter the temporary price ➔Place an item on the platter ➔Press the **PRINT** key.
By-Count PLU	Call up a By-Count PLU ➔Enter the quantity ➔ Press the **PRINT** key
OVERRIDE key (By-Count PLU)	Call up a By-Count PLU ➔ Press the **OVERRIDE** key ➔ Enter the password and then press the **PRINT** key ➔ Enter the quantity ➔Press the **FOR** key➔change pieces by pressing numeric keys➔ Press the **FOR** key ➔ Change price by pressing numeric keys ➔ Press the **PRINT** key
Non-Food PLU	Call up a Non-Food PLU ➔ Press the **PRINT** key
OVERRIDE key (Non-Food PLU)	Call up a Non-Food PLU ➔ Press the **OVERRIDE** key ➔ Enter the password and then press the **PRINT** key ➔ Enter the temporary price ➔ Press the **PRINT** key
SAVE key	Call up a PLU ➔ Press the **SAVE** key ➔(Place an item on the platter) ➔ Press the **PRINT** key * **SAVE** key is used to prevent the auto clearing of PLU data.
PRE-PACK key	Press the **PREPACK** key➔ Call up a PLU ➔ Place an item on the platter ➔ Label is printed automatically • To release prepack function, press the **PREPACK** key
X key	To print 5 labels : Call up a PLU ➔ Place an item on the platter ➔Press the X key➔Type a number of labels ➔ Press the **PRINT** key * When you want to stop label printing, press **C**(clear) key
RETURN key	To undo erroneous sales transactions : Press the **RETURN** key ➔ Enter the password and then press the **PRINT** key ➔ call-up the PLU that you wish to return➔ Enter the total price that was printed on the return PLU's label ➔Press the **PRINT** or **RETURN** key.
TARE key	Put a container on the platter➔ Press the **TARE** key➔ Put an item in the container ➔Call up a PLU ➔Press the **PRINT** key * To cancel the TARE function, remove the container and press the **TARE** key.
AUTO/MANUAL key	Auto Print : Press the **AUTO** key (Auto lamp " ▼ " is ON) ➔ Call up a PLU ➔Put an item on the platter ➔ Label is printed automatically Manual Print : In the Auto mode, press the **AUTO** key. (Auto lamp " ▼ " is OFF)
C key	**C** key is used to clear erroneous entries and to clear PLUs that have been called-up.
ZERO key	**ZERO** key is used to correct for a deviation from zero as long as there are no PLUs or MISC PLUs called-up.
How to Program PLU	Press the **MENU** key ➔ Press the 4 key ➔ Enter the password and then press the **PRINT** key ➔ Press the 2 key➔ Program PLU.

How to Set Speed key	Press the **MENU** key ➔ Press the 4 key ➔ Enter the password and then press the **PRINT** key ➔ Press the 9 key ➔ Set Speed key by pressing the PAGE UP, DOWN keys
ADD-UP Mode	Call up a PLU ➔Put an item on the platter ➔Press the **ADD** key ➔ Repeat above steps ➔To print the grand-total, press the **ST/TTL** key
VOID key	To void last transaction in ADD-UP mode : Press the **VOID** key ➔ Enter the password and then press the **PRINT** key
DATE/TIME	Press the **ALT** and the **DATE/TIME** key ➔ Enter the password and then press the **PRINT** key ➔Enter Year, Month, Day and then press the **PRINT** key
DEPT key	Press the **DEPT** key ➔ Enter the password and then press the **PRINT** key ➔ Enter new Department number and then press the **PRINT** key

CAS (USA) CORPORATION
LIMITED WARRANTY

CAS (USA) Corporation ("CAS") warrants to the first end user customer of the CAS product enclosed with this limited warranty statement, that the product if purchased and used in the United States or Canada, conforms to the manufacturer's specifications and will be free from defects in workmanship and materials for a period indicated on the space provided on the bottom of this form from the date of original purchase or three months after product is shipped from CAS to the CAS Authorized Dealer, which ever comes first. CAS warrants that the CAS product is manufactured from new components and parts or like-new components and parts which perform like new and meet the CAS standard of quality. **And only on CAS printing products,** CAS also warrants that the consumable labels enclosed will perform to the manufacturer's specific usage, which usage may expire before the expiration of the limited warranty for the CAS product.

Should your CAS product prove defective during the warranty period, please contact the CAS Dealer from which you purchased the CAS product, or call the CAS Service Hot line at (201) 933-9002 for warranty repair instructions and return authorization, if required. CAS or a CAS Authorized Service Center will, at their option, repair or replace on an exchange basis the defective unit, without charge for parts or labor. When warranty service involves the exchange of the product or of a part, the item replaced becomes CAS property. The exchanged product or part may be new or previously repaired to the CAS standard of quality. Exchange or replacement products or parts assume the remaining warranty period of the product covered by this limited warranty.

This warranty covers only normal consumer use in the United States and Canada. This warranty does not cover labels or third party parts, components or peripheral devices added to the CAS product after its shipment from CAS, e.g., the dealer-added boards or chips, or the accuracy of the product after it is shipped from CAS. CAS is not responsible for warranty service should the CAS label or logo or the rating label or serial number be removed or tampered with or should the product fail to be properly maintained or fail to function properly as a result of misuse, abuse, improper installation, neglect, improper shipping, damage caused by disasters such as fire, flood, and lightning, improper electrical current, software problems, interaction with non-CAS products, or service other than by CAS or a CAS Authorized Service Center. Packaging and shipping cost to and from the CAS repair facility will be CAS's responsibility. If a claimed defect cannot be identified or reproduced in service, you will be held responsible for costs incurred.

THE WARRANTY AND REMEDY PROVIDED ABOVE ARE EXCLUSIVE AND IN LIEU OF ALL OTHER EXPRESS OR IMPLIED WARRANTIES INCLUDING, BUT NOT LIMITED TO, THE IMPLIED WARRANTIES OF MERCHANTABILITY OR FITNESS FOR A PARTICULAR PURPOSE. SOME LAWS DO NOT ALLOW THE EXCLUSION OF IMPLIED WARRANTIES. IF THESE LAWS APPLY, THEN ALL EXPRESS AND IMPLIED WARRANTIES ARE LIMITED TO THE WARRANTY PERIOD IDENTIFIED BELOW. UNLESS STATED HEREIN, ANY STATEMENTS OR REPRESENTATIONS MADE BY ANY OTHER PERSON OR FIRM ARE VOID. EXCEPT AS PROVIDED IN THIS WRITTEN WARRANTY, NEITHER CAS (USA) CORPORATION NOR ITS AFFILIATES SHALL BE LIABLE FOR ANY LOSS, INCONVENIENCE, LOSS OF ANY DATA OR PROGRAMMING, OR DAMAGE, INCLUDING DIRECT, SPECIAL, INCIDENTAL, OR CONSEQUENTIAL DAMAGES, RESULTING FROM THE USE OR INABILITY TO USE THE CAS PRODUCT, WHETHER RESULTING FROM BREACH OF WARRANTY OR ANY OTHER LEGAL THEORY.

In Canada, warranties include both warranties and conditions.

Some jurisdictions do not allow limitations on how long an implied warranty lasts and some jurisdictions do not allow the exclusion or limitation of incidental or consequential damages, so the above limitations and exclusions may not apply to you.

This warranty gives you specific legal rights, and you may have other rights that may vary from jurisdiction to jurisdiction.

This warranty applies ONLY to the LP-Series label printing scales

WARRANTY PERIOD: **1 (ONE) YEAR**

To locate the ***CAS Authorized Dealer*** or ***CAS Authorized Service Center*** nearest you call:

(201) 933-9002

or write to:

CAS (USA) Corporation • 99 Murray Hill Parkway • East Rutherford, NJ 07073

Warrantee